JEWISH CONGREGATION OF BROOKVILLE

Highway Work Permit Drawings

NEW YORK STATE ROUTE 106

INCORPORATED VILLAGE OF MUTTONTOWN

NASSAU COUNTY, NEW YORK

PROJECT LOCATION

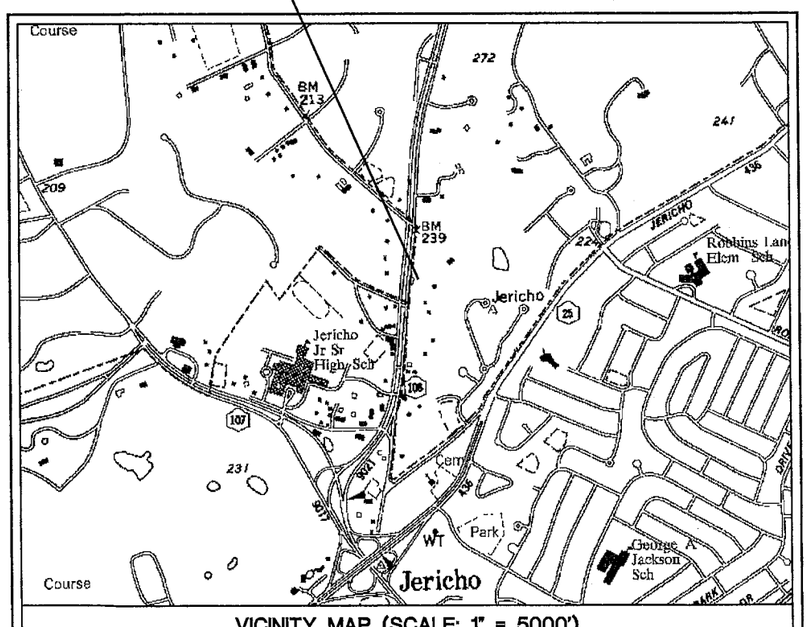

VICINITY MAP (SCALE: 1" = 5000')

PREPARED BY:

CAMERON ENGINEERING & ASSOCIATES, LLP

100 Sunnyside Boulevard, Suite 100
Woodbury, NY 11797
PH: (516) 827-4900 FX: (516) 827-4920

260 Madison Avenue, 8th Floor
New York, NY 10016
PH: (212) 324-4000 FX: (646) 216-2001

COPYRIGHT

JUNE 2008

NYSDOT CASE 06-058P
SECT. 15 BLOCK A LOTS 2429 & 2430

O:\CE1064N\TRAFFIC\CE1064N 00-COVER.dwg, CE1306A-COVER, 1/6/2011 12:52:47 PM, lberman

DRAWING INDEX

DRAWING NO.	SHEET NAME	SHEET NO.
	COVER	1
I1	INDEX SHEET	2
TS1	TYPICAL SECTION	3
C1	CONSTRUCTION PLAN	4
G1	GRADING & DRAINAGE PLAN	5
G2	PROPOSED LEFT TURN CURB LINE PROFILE	6
PMS1	PAVEMENT MARKING PLAN	7
MPT1	MAINTENANCE & PROTECTION TRAFFIC	8
MD1	DETAILS	9
MD2	DETAILS (2)	10

SYMBOL LEGEND (EXISTING)

- MANHOLE
- CURB INLET
- DRAIN INLET
- DRAIN MANHOLE
- D — DRAIN LINE
- UTILITY POLE
- OVERHEAD WIRES
- T — TELEPHONE PAINT
- T.S.P. TRAFFIC SIGNAL POLE
- TRAFFIC SIGNAL BOX
- GAS VALVE
- WATER VALVE

GENERAL CONSTRUCTION NOTES:

1. IMMEDIATELY PRIOR TO THE START OF ANY PAVING OPERATION (TACK COAT, BITUMINOUS CONCRETE PAVING COURSES, MIXED-IN-PLACE, ETC.) THE CONTRACTOR SHALL REMOVE ALL LEAVES, VEGETATION, AND OTHER OBJECTIONABLE MATERIALS. NO SEPARATE PAYMENT WILL BE MADE FOR THIS WORK. THE COST OF THE WORK SHALL BE INCLUDED IN THE PRICES BID FOR THE ASSOCIATED PAVEMENT ITEMS.
2. ALL ELEVATIONS SHOWN ON THE PLANS REFER TO THE NATIONAL GEODETIC VERTICAL DATUM. THE CONTRACTOR SHALL USE THE TEMPORARY BENCH MARKS PROVIDED AS INDICATED ON THE DRAWINGS AT VARIOUS LOCATIONS WITHIN THE PROJECT SITE.
3. ALL AREAS DESIGNATED FOR REMOVAL SHALL FIRST BE PROVIDED WITH THE APPROPRIATE SAWCUT BY THE CONTRACTOR.
4. THE CONTRACTOR SHALL MAINTAIN POSITIVE SURFACE DRAINAGE FLOW AS INDICATED ON THE PLANS BY THE ARROWS.

ABBREVIATIONS:

ASPH.	ASPHALT
B.M.	BENCHMARK
BR.	BRICK
CB	CATCH BASIN
CONC.	CONCRETE
MH	MANHOLE
PC	POINT OF CURVATURE
STA.	STATION
P	PAVEMENT ELEVATION
BC	BOTTOM OF CURB ELEVATION

UTILITY NOTES

1. THE CONTRACTOR IS HEREBY NOTIFIED THAT UNDERGROUND UTILITIES EXIST AT THE SITE. VERIFICATION AND FIELD MARKING OF LOCATION OF EXISTING UTILITIES IS REQUIRED PRIOR TO COMMENCEMENT OF WORK AND IS THE RESPONSIBILITY OF THE CONTRACTOR.
2. IT IS THE RESPONSIBILITY OF THE CONTRACTOR TO VERIFY THE ACCURACY OF ALL EXISTING UTILITY INFORMATION.
3. ANY DAMAGE OR DISTURBANCE TO EXISTING UTILITIES DURING THE DURATION OF THE CONTRACT IS TO BE REPAIRED/REPLACED "IN KIND" BY THE CONTRACTOR AT HIS OWN EXPENSE.
4. EXCAVATIONS SHALL BE CONDUCTED IN COMPLIANCE WITH NEW YORK STATE INDUSTRIAL CODE (RULE NO.) 123 AND INDUSTRIAL CODE PART RULE NO. 753. PRIOR TO PERFORMING ANY WORK, THE CONTRACTOR MUST ARRANGE FOR A UTILITY TONE OUT.
5. THE ENTIRE EXISTING STORM DRAINAGE SYSTEM ALONG AND IMMEDIATELY ADJACENT TO THE SITE'S ROUTE 106 FRONTAGE SHALL BE MAINTAINED BY THE CONTRACTOR DURING CONSTRUCTION AND CLEANED AT THE COMPLETION OF THE PROJECT. THE LIMITS OF THE CLEANING OPERATION SHALL BE ESTABLISHED BY THE NYSDOT RESIDENT ENGINEER OR THE OWNER'S REPRESENTATIVE.
6. THE LOCATIONS AND SIZES OF EXISTING UNDERGROUND UTILITIES SHOWN ON THESE PLANS ARE APPROXIMATE & ARE NOT GUARANTEED. THE CONTRACTOR SHALL BECOME FAMILIAR WITH ALL VOLTAGES CARRIED IN OVERHEAD OR UNDERGROUND UTILITY SERVICES. THE CONTRACTOR IS FOREWARNED TO ASCERTAIN AND DETERMINE THE PRECISE LOCATIONS PREPARATORY TO EXCAVATION.
7. COST OF REMOVING, REPLACING, PROTECTING, MODIFYING, MAINTAINING, OR RELOCATING PRIVATE UNDERGROUND ELECTRIC LINES AND ROOF DRAINS SHALL BE INCLUDED IN THE PRICE BID FOR VARIOUS CONTRACT ITEMS.
8. THE CONTRACTOR SHALL PROTECT ALL DRAINAGE AND SANITARY STRUCTURES AND PIPES WHEN ADJUSTING INLETS, COVERS, OR FRAMES. NO SEPARATE PAYMENT SHALL BE MADE. ANY DAMAGE SHALL BE REPAIRED BY THE CONTRACTOR AT THE CONTRACTOR'S EXPENSE.
9. UTILITIES HAVE BEEN LOCATED BASED ON UTILITY COMPANY INFORMATION AND FIELD SURVEY. THE CONTRACTOR IS ADVISED THAT THE ACTUAL LOCATIONS OF UTILITIES MAY VARY FROM THEIR LOCATIONS DEPICTED. ACCORDINGLY, THE CONTRACTOR SHALL INCLUDE MEANS AND METHODS (INCLUDING BUT NOT LIMITED TO HAND EXCAVATION, TEST PITS ETC.) NECESSARY TO EXCAVATE AND INSTALL THE NEW FACILITIES.
10. THE CONTRACTOR SHALL BE RESPONSIBLE TO ADJUST ALL FRAMES, GRATES AND UTILITY BOXES TO THE FINAL PAVED SURFACE. THE CONTRACTOR SHALL PERFORM THE ADJUSTMENT IN ACCORDANCE WITH NYSDOT STANDARD SPECIFICATIONS AND REGIONAL GUIDE SHEETS AT NO ADDITIONAL COST. ALL ADJUSTMENTS SHALL BE INCLUDED AS PART OF THE PAVEMENT SURFACE INSTALLATION. EXISTING CATCH BASINS TO HAVE EXISTING FRAMES RESET ON EXISTING STRUCTURES WILL BE CONDUCTED IN CONFORMANCE WITH THE SPECIFICATIONS FOR ITEM 10604.0721.

DESIGN SPECIFICATIONS AND STANDARDS

1. NYSDOT HIGHWAY DESIGN MANUAL VOLUMES I AND II, LATEST EDITION.
2. STANDARD SPECIFICATION, NYSDOT CONSTRUCTION MATERIALS OFFICE OF ENGINEERING LATEST EDITION.
3. OFFICIAL COMPILATION, CODES, RULES AND REGULATIONS OF THE STATE OF NEW YORK, 17 TRANSPORTATION, TITLE 200 UNIFORM TRAFFIC CONTROL DEVICES. LATEST EDITION.
4. NEW YORK STATE DEPARTMENT OF TRANSPORTATION, US CUSTOMARY STANDARD SHEETS.
5. AMERICAN ASSOCIATION OF STATE HIGHWAY AND TRANSPORTATION OFFICIALS, "A POLICY ON GEOMETRIC DESIGN AT HIGHWAYS AND STREETS, LATEST EDITION.
6. THE CONTRACTOR'S ATTENTION IS DIRECTED TO THE NYSDOT REGIONAL GUIDE SHEETS AND US CUSTOMARY STANDARD SHEETS FOR COMPLIANCE WITH THE SPECIFICATIONS OF THESE CONTRACT DOCUMENTS. THE FOLLOWING LIST OF SHEETS IS PROVIDED FOR THE CONTRACTORS USE AND IS NOT INTENDED TO BE ALL INCLUSIVE. THE CONTRACTOR SHOULD OBTAIN A COMPLETE SET FROM NYSDOT FOR HIS USE, AND UTILIZE THE DETAILS CONTAINED IN THE NYSDOT METRIC STANDARD SHEETS.

DRAWING NUMBER	DESCRIPTION
209-01	SOIL EROSION AND SEDIMENT CONTROL, LINEAR MEASURES
209-02	SOIL EROSION AND SEDIMENT CONTROL, CHECK DAMS (SHEET 1 OF 2)
209-02	SOIL EROSION AND SEDIMENT CONTROL, CHECK DAMS (SHEET 2 OF 2)
209-03	SOIL EROSION AND SEDIMENT CONTROL, DRAINAGE STRUCTURE INLET PROTECTION (SHEET 1 OF 2)
209-03	SOIL EROSION AND SEDIMENT CONTROL, DRAINAGE STRUCTURE INLET PROTECTION (SHEET 2 OF 2)
209-04	SOIL EROSION AND SEDIMENT CONTROL, PIPE INLET/OUTLET PROTECTION, PIPE SLOPE DRAIN
209-05	SOIL EROSION AND SEDIMENT CONTROL, CONSTRUCTION ENTRANCES
209-06	SOIL EROSION AND SEDIMENT CONTROL, TURBIDITY CURTAIN (REFER TO EI 05-022)
209-07	SOIL EROSION AND SEDIMENT CONTROL, SEDIMENT TRAPS
402-01	HOT MIX ASPHALT OVERLAY SPLICE (PAVEMENT TERMINATION DETAIL)
604-02	DRAINAGE STRUCTURE DETAILS (SHEET 1 OF 4)
604-02	DRAINAGE STRUCTURE DETAILS (SHEET 2 OF 4)
604-02	DRAINAGE STRUCTURE DETAILS (SHEET 3 OF 4)
604-02	DRAINAGE STRUCTURE DETAILS (SHEET 4 OF 4)
608-03	DRIVEWAY DESIGN GUIDELINES
608-04	DRIVEWAY ENTRANCE DETAILS
608-05	DRIVEWAY ENTRANCE LAYOUT
608-06	DRIVEWAY OPENING LIMITS
609-02	MISCELLANEOUS CURB DETAILS
609-03	CONCRETE CURB, CURB AND GUTTER, AND HOT MIX ASPHALT CURB
619-01	TEMPORARY CONCRETE BARRIER (SHEET 1 OF 2)
619-01	TEMPORARY CONCRETE BARRIER (SHEET 2 OF 2)
619-02	TYPE III CONSTRUCTION BARRICADES (SHEET 1 OF 2)
619-02	TYPE III CONSTRUCTION BARRICADES (SHEET 2 OF 2)
619-04	PORTABLE TEMPORARY WOODEN SIGN SUPPORT
645-01	STANDARD SIGN BLANK DETAILS (SHEET 1 OF 2)
645-01	STANDARD SIGN BLANK DETAILS (SHEET 2 OF 2)
645-03	POSITIONING OF TRAFFIC SIGNS (SHEET 1 OF 2)
645-03	POSITIONING OF TRAFFIC SIGNS (SHEET 2 OF 2)
645-11	BI-DIRECTIONAL BREAKAWAY BASE AND HINGE ASSEMBLY
655-03	CAST MANHOLE FRAMES, GRATES AND COVERS
655-04	RETICULINE GRATES
655-05	CAST FRAMES AND CURB BOXES AND WELDED FRAMES
685-01	PAVEMENT MARKING DETAILS (SHEET 1 OF 5)
685-01	PAVEMENT MARKING DETAILS (SHEET 2 OF 5)
685-01	PAVEMENT MARKING DETAILS (SHEET 3 OF 5)
685-01	PAVEMENT MARKING DETAILS (SHEET 4 OF 5)
685-01	PAVEMENT MARKING DETAILS (SHEET 5 OF 5)

GENERAL NOTES

1. THE CONTRACTOR IS TO VISIT SITE AND VERIFY ALL EXISTING CONDITIONS (INCLUDING UNDERGROUND UTILITIES, PIPES, ETC.) AND LIMITATIONS AFFECTING THE PROPOSED WORK.
2. THE CONTRACTOR IS TO OBTAIN ALL OR ANY PERMITS REQUIRED FOR THE EXECUTION OF THIS CONTRACT.
3. ALL WORK IS TO BE PERFORMED IN COMPLIANCE WITH ALL LOCAL, STATE, AND APPLICABLE BUILDING CODE REGULATIONS.
4. THE CONTRACTOR IS RESPONSIBLE FOR REPAIRING ALL DAMAGE TO EXISTING SITE AND STRUCTURE(S) INCURRED DURING CONSTRUCTION. SUCH PATCHING AND REPAIR SHALL MATCH EXISTING.
5. THE CONTRACTOR SHALL PROVIDE ALL LABOR, MATERIALS, EQUIPMENT, APPLIANCES, AND SERVICES NECESSARY TO EXECUTE AND COMPLETE ALL WORK AS REQUIRED BY THE CONTRACT DOCUMENTS.
6. THE CONTRACTOR SHALL REPAIR EXISTING SHOULDER, SIDEWALK, AND CURBING AS ORDERED BY THE STATE ENGINEER.
7. IT IS THE RESPONSIBILITY OF THE CONTRACTOR TO CONFORM TO DROP-OFF PROTECTION AS STIPULATED IN NYSDOT STANDARD SPECIFICATION 619-3.02K. THE CONTRACTOR SHALL COMPLY WITH ALL OSHA REGULATIONS AND NYSDOT STANDARD SPECIFICATION SECTIONS 107 AND 619 IN REGARDS TO PROVIDING SAFETY TO THE WORKERS AND PUBLIC.
8. NO WORK IS TO BE PERFORMED WITHOUT AN AUTHORIZED SCHEDULE APPROVED BY THE OWNER'S REPRESENTATIVE.
9. ALL REMOVALS TO BE LEGALLY DISPOSED OF OFF-SITE.
10. THE CONTRACTOR SHALL CLEAN ALL EXISTING STRUCTURES AND PIPES WITHIN THE WORK AREA AS ORDERED BY THE ENGINEER.
11. ALL DISTURBED LANDSCAPE AREAS SHALL BE RESTORED WITH MINIMUM 4" OF TOPSOIL, FINE GRADING, AND SEED OR MULCH AS DIRECTED BY OWNER'S REPRESENTATIVE.
12. THE CONTRACTOR SHALL ESTABLISH EROSION CONTROL MEASURES IN ACCORDANCE WITH N.Y.S. GUIDELINES FOR URBAN EROSION AND SEDIMENT CONTROL (REFER TO NYSDOT STATE STANDARD SHEETS 209-01 THROUGH 209-07).
13. THE CONTRACTOR SHALL STRICTLY ADHERE TO THE CURRENT PROVISIONS SET FORTH AND CONTAINED WITHIN THE A.C.I. RECOMMENDATIONS FOR "HOT WEATHER CONCRETING" (A.C.I. 305R) AND "COLD WEATHER CONCRETING" (A.C.I. 306R).
14. THE CONTRACTOR SHALL PROTECT ALL TREES ON THE PROJECT FROM DAMAGE CAUSED BY CONSTRUCTION OPERATIONS. ANY TREE DAMAGE CAUSED BY THE CONTRACTOR SHALL BE REPAIRED BY A CERTIFIED ARBORIST AT THE CONTRACTOR'S EXPENSE.
15. ALL CONCRETE CURBING, SIDEWALKS, & DRAINAGE STRUCTURES SHALL CONFORM TO THE NYSDOT STANDARD DETAILS.
16. ALL TRAFFIC CONTROL DEVICES (I.E. SIGNALS, SIGNS, AND PAVEMENT MARKINGS) SHALL BE INSTALLED IN CONFORMANCE WITH THE GUIDELINES OF THE FEDERAL MANUAL UNIFORM TRAFFIC CONTROL DEVICES, (MUTCD) HIGHWAY WORK ZONE TRAFFIC CONTROL AND NYSDOT SUPPLEMENTS.
17. THE CONTRACTORS PERFORMING ANY AND ALL TRAFFIC CONTROL DEVICE INSTALLATION WORK SHALL NOTIFY THE TOWN OF BROOKHAVEN DIVISION OF TRAFFIC SAFETY 48 HOURS IN ADVANCE OF BEGINNING SUCH WORK ALONG A TOWN ROAD.
18. ALL PAVEMENT MARKINGS REQUIRED SHALL BE THERMOPLASTIC (NEW YORK STATE SPECIFICATIONS) UNLESS OTHERWISE NOTED ON PLAN.
19. STOP LINE SIGHT DISTANCE SHALL BE MAINTAINED AT ALL INTERSECTIONS IN ACCORDANCE WITH AASHTO REQUIREMENTS.
21. THIS DRAWING REFERENCES A SURVEY BY: JERRY P. LaRUE LICENSED LAND SURVEYOR 1399 PARK AVENUE NEW HYDE PARK, NEW YORK 11040.
22. RELOCATION OF EXISTING UTILITY POLES, TRAFFIC SIGNS, ETC. SHALL BE COORDINATED BY THE CONTRACTOR. THE CONTRACTOR SHALL BE RESPONSIBLE FOR THE FIELD VERIFICATION OF THEIR PRESENCE.
23. UTILITY INFORMATION SHOWN ON THESE PLANS IS BASED ON VISIBLE FIELD EVIDENCE AND AVAILABLE RECORDS. THE CONTRACTOR SHALL FIELD VERIFY THE LOCATION OF ALL UTILITIES PRIOR TO COMMENCING WORK. CARE SHALL BE TAKEN NOT TO DISTURB EXISTING UTILITIES AND SERVICE CONNECTIONS (OR PORTIONS THEREOF) TO REMAIN. THE CONTRACTOR IS RESPONSIBLE FOR THE REMOVAL OF ABANDONED UTILITY SERVICE CONNECTIONS AND INSTALLATION OF NEW SERVICE CONNECTIONS AND SHALL COORDINATE WORK WITH THE APPROPRIATE UTILITY COMPANY.
24. REPAIR DAMAGED SIDEWALK, CURBING, AND ASPHALT SHOULDERS A.O.B.E.

PERMIT DRAWINGS

NO.	DATE	REVISION DESCRIPTION	INT.
1	5/12/08	DOT COMMENTS	JDB
2	8/5/8	DOT COMMENTS	JDB
3	12/18/8	TOWN COMMENTS	JDB
4	1/08/09	TOWN COMMENTS	JDB
5	10/08/09	DOT COMMENTS	JDB
6	5/25/10	DOT COMMENTS	JDB
7	10/22/10	DOT COMMENTS	JDB

UNAUTHORIZED ALTERATION OR ADDITION TO THIS DOCUMENT IS A VIOLATION OF SECTION 7209 OF THE NEW YORK STATE EDUCATION LAW.

THESE DOCUMENTS (OR COPIES OF ANY THEREOF) PREPARED BY OR BEARING THE SEAL OF THE ENGINEER, SHALL NOT BE REUSED FOR ANY EXTENSIONS OF THE PROJECT OR ANY OTHER PROJECT WITHOUT THE WRITTEN CONSENT OF THE ENGINEER.

CAMERON ENGINEERING & ASSOCIATES, LLP
100 Sunnyside Boulevard, Suite 100, Woodbury, NY 11797, PH: (516) 827-4900 FX: (516) 827-4920
260 Madison Avenue, 8th Floor, New York, NY 10016, PH: (212) 324-4000 FX: (646) 216-2001
COPYRIGHT

PROJECT NAME: JEWISH CONGREGATION OF BROOKVILLE

PROJECT LOCATION: INC. VILLAGE OF MUTTONTOWN NASSAU COUNTY, NY

TITLE: INDEX SHEET

DISCIPLINE: TRAFFIC

NYSDOT CASE 06-058P
SECT. 15 BLOC A LOTS 2429 & 2430

PROJECT ENGINEER: JDB	PROJECT NO. CE1064N	DRAWING NO. I1
DESIGNED BY: JDB	JOB NO. CE1064N	
DRAWN BY: LMB	DATE: JUNE 2008	SHEET 2 OF 10
CHECKED BY: AJK	SCALE: AS SHOWN	

O:\CE1064N\TRAFFIC\CE1064N INDEX SHEET.dwg, CE1306A-INDEX SHEET, 1/6/2011 12:53:02 PM, lberman

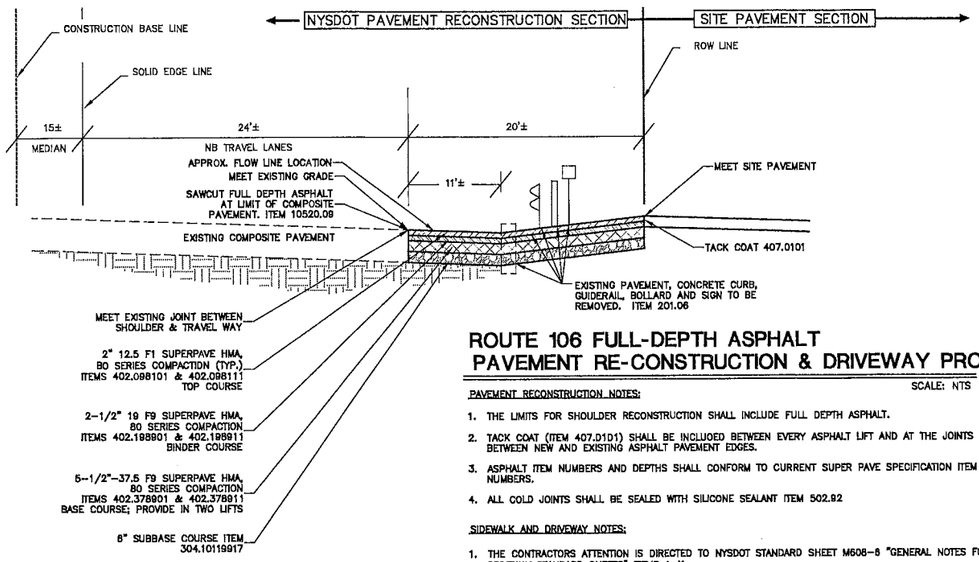

ROUTE 106 FULL-DEPTH ASPHALT PAVEMENT RE-CONSTRUCTION & DRIVEWAY PROFILE

SCALE: NTS

PAVEMENT RECONSTRUCTION NOTES:

1. THE LIMITS FOR SHOULDER RECONSTRUCTION SHALL INCLUDE FULL DEPTH ASPHALT.
2. TACK COAT (ITEM 407.0101) SHALL BE INCLUDED BETWEEN EVERY ASPHALT LIFT AND AT THE JOINTS BETWEEN NEW AND EXISTING ASPHALT PAVEMENT EDGES.
3. ASPHALT ITEM NUMBERS AND DEPTHS SHALL CONFORM TO CURRENT SUPER PAVE SPECIFICATION ITEM NUMBERS.
4. ALL COLD JOINTS SHALL BE SEALED WITH SILICONE SEALANT ITEM 502.82

SIDEWALK AND DRIVEWAY NOTES:

1. THE CONTRACTORS ATTENTION IS DIRECTED TO NYSDOT STANDARD SHEET M608-6 "GENERAL NOTES FOR DRIVEWAY STANDARD SHEETS" ITEMS A-K.

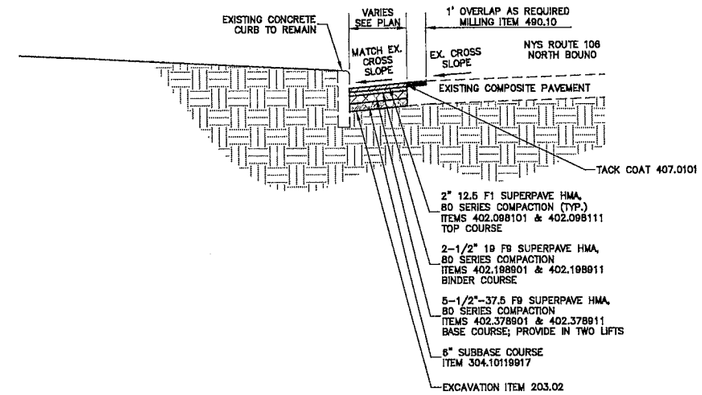

TYPICAL SECTION

NYS RT 106
STATION 12+35 TO 17+58
NTS

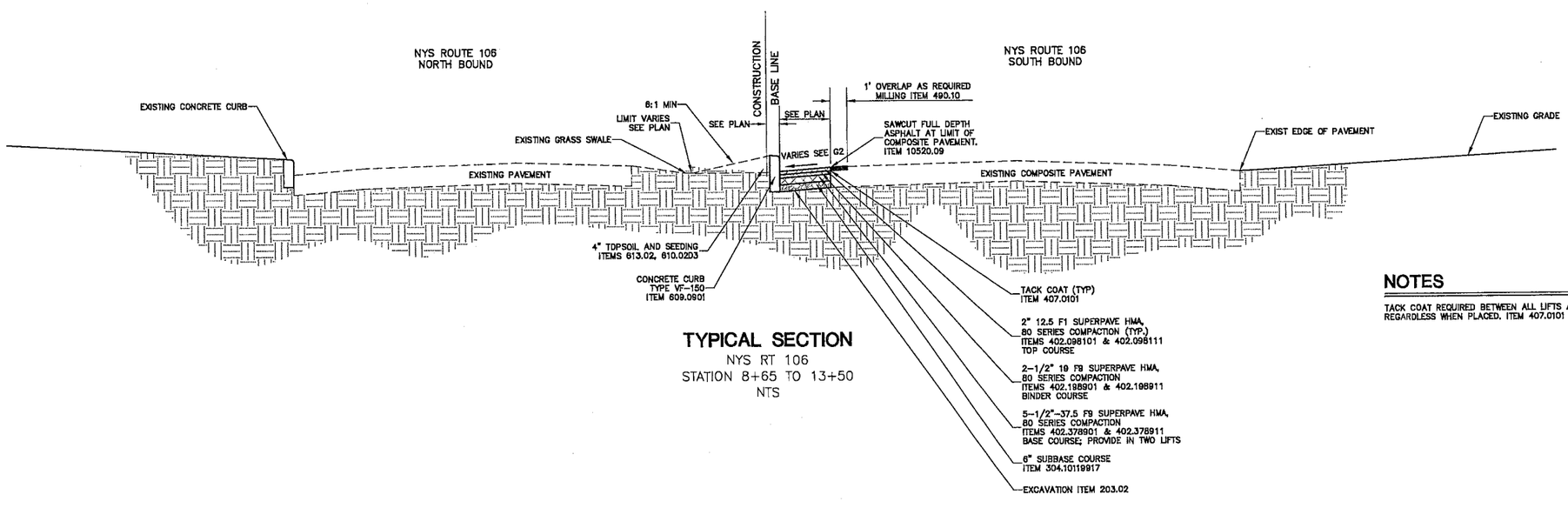

TYPICAL SECTION

NYS RT 106
STATION 8+65 TO 13+50
NTS

NOTES

TACK COAT REQUIRED BETWEEN ALL LIFTS AND JOINTS REGARDLESS WHEN PLACED. ITEM 407.0101

PERMIT DRAWINGS

DATE	REVISION DESCRIPTION	INT.
5/12/08	DOT COMMENTS	JDB
8/5/8	DOT COMMENTS	JDB
12/18/8	TOWN COMMENTS	JDB
1/06/09	TOWN COMMENTS	JDB
10/08/09	DOT COMMENTS	JDB
6/25/10	DOT COMMENTS	JDB
10/22/10	DOT COMMENTS	JDB

UNAUTHORIZED ALTERATION OR ADDITION TO THIS DOCUMENT IS A VIOLATION OF SECTION 7209 OF THE NEW YORK STATE EDUCATION LAW.

THESE DOCUMENTS (OR COPIES OF ANY THEREOF) PREPARED BY OR BEARING THE SEAL OF THE ENGINEER, SHALL NOT BE REUSED FOR ANY EXTENSIONS OF THE PROJECT OR ANY OTHER PROJECT WITHOUT THE WRITTEN CONSENT OF THE ENGINEER.

CAMERON ENGINEERING & ASSOCIATES, LLP
100 Sunnyside Boulevard, Suite 130 Woodbury, NY 11797 PH: (516) 827-4900 FX: (516) 827-4900
260 Madison Avenue, 8th Floor New York, NY 10016 PH: (212) 324-6000 FX: (646) 216-3001
COPYRIGHT

PROJECT NAME: JEWISH CONGREGATION OF BROOKVILLE

PROJECT LOCATION: INC. VILLAGE OF MUTTONTOWN NASSAU COUNTY, NY

TITLE: TYPICAL SECTION

DISCIPLINE: TRAFFIC

NYSDOT CASE 06-058P SECT. 15 BLOC A LOTS 2429 & 2430

PROJECT ENGINEER:	PROJECT NO.	DRAWING NO.
JDB	CE1064N	TS1
DESIGNED BY: JDB	JOB NO. CE1064N	
DRAWN BY: LMB	DATE: JUNE 2008	SHEET 3 OF 10
CHECKED BY: AJK	SCALE: AS SHOWN	

CE1064N CONSTRUCTION PLAN.dwg, CE1306A-CONSTRUCTION PLAN (2), 1/6/2011 12:53:17 PM, lberman

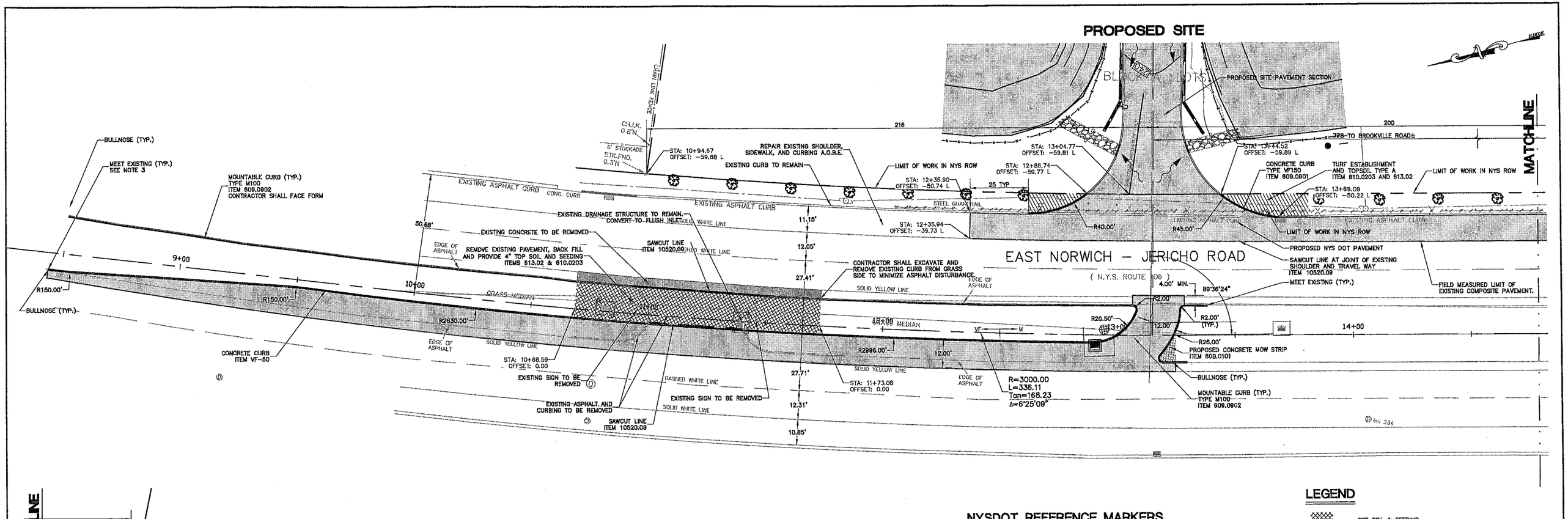

NYSDOT REFERENCE MARKERS

108 0301 1083 NORTHBOUND ROUTE 106 APPROXIMATELY 260 FT. SOUTH OF THE SITE DRIVEWAY C.L.

106 0301 1084 NORTHBOUND ROUTE 106 APPROXIMATELY 200 FT. NORTH OF THE SITE DRIVEWAY C.L.

SPECIAL NOTE

PG BINDER

USE A PG 70–22 MEETING THE REQUIREMENTS OF AASHTO M320, STANDARD SPECIFICATION FOR PERFORMANCE GRADED ASPHALT BINDER FOR THE PRODUCTION OF HMA MIXTURES FOR THIS PROJECT.

USE OF POLYPHOSPHORIC ACID (PPA) TO MODIFY THE PG BINDER PROPERTIES IS PROHIBITED FOR MIXTURES CONTAINING LIMESTONE, LIMESTONE AS AN AGGREGATE BLEND COMPONENT, LIMESTONE AS A CONSTITUENT IN CRUSHED GRAVEL AGGREGATE, OR RECYCLED ASPHALT PAVEMENT (RAP) THAT INCLUDES ANY LIMESTONE. THIS PROHIBITION ALSO APPLIES TO THE USE OF PPA AS A CROSS–LINKING AGENT FOR POLYMER MODIFICATION.

MIX DESIGN

THE MIXTURE DESIGNS MUST BE DEVELOPED IN ACCORDANCE WITH THE CRITERIA SPECIFIED IN THE HMA ITEMS THAT ARE APPROPRIATE FOR AN "ESTIMATED TRAFFIC" LEVEL OF 6 MILLION ESALS.

THE CONTRACTOR IS RESPONSIBLE FOR SUBMITTING THE HOT MIX ASPHALT SUPERPAVE MIX DESIGN AND THE PROPOSED ASPHALT PLANT SUPPLIER TO NYSDOT IN ADVANCE OF THE WORK. NYSDOT REGION 10 MATERIALS WILL CONDUCT A REVIEW OF THE MIX DESIGN. AN APPROVAL BY NYSDOT MATERIALS IS NECESSARY PRIOR TO USE.

LEGEND

- TOP SOIL & SEEDING ITEMS 613.02 & 610.0203
- FULL–DEPTH ASPHALT PAVEMENT RECONSTRUCTION
- CONCRETE MOW STRIP ITEM 608.0101
- TURF ESTABLISHMENT/TOPSOIL TYPE A ITEM 610.0203/ 613.02
- 8–10' HT, B&B, DECIDUOUS TREES, 25' O.C. ITEM 611.010114
- CONCRETE CURB TYPE VF150/ MOUNTABLE CURB ITEM 609.0901/ 609.0902
- SAWCUT ITEM 10430.0903

NOTE

1. THE SAWCUT LINE REPRESENTATION ON THESE PLANS FOR FULL DEPTH ASPHALT SHOULDER RECONSTRUCTION HAS BEEN LOCATED BY FIELD MEASUREMENTS. THE INTENT IS TO AVOID CUTTING INTO THE EXISTING COMPOSITE PAVEMENT TO CONSTRUCT THE FULL DEPTH ASPHALT SHOULDER.
2. THE CONTRACTOR SHALL VERIFY THE LOCATION OF THE SEAM BETWEEN THE EXISTING ASPHALT SHOULDER AND THE EXISTING COMPOSITE PAVEMENT. THE LIMIT OF EXISTING COMPOSITE PAVEMENT SHALL BE THE LIMIT OF SHOULDER RECONSTRUCTION OR A.O.B.E.
3. DUE TO EXISTING COMPOSITE PAVEMENT LIMITS AND THE PROXIMITY OF EDGE OF PAVEMENT A MINIMUM 4 FEET OF PAVEMENT CAN NOT BE MET.

GRAPHIC SCALE

20 0 10 20 40

(IN FEET)
HORIZ. 1 inch = 20 ft.

PERMIT DRAWINGS

	DATE	REVISION DESCRIPTION	INT.
6	5/12/08	DOT COMMENTS	JDB
5	8/5/8	DOT COMMENTS	JDB
4	12/18/8	TOWN COMMENTS	JDB
3	1/06/09	TOWN COMMENTS	JDB
2	10/08/09	DOT COMMENTS	JDB
1	6/25/10	DOT COMMENTS	JDB
7	10/22/10	DOT COMMENTS	JDB

UNAUTHORIZED ALTERATION OR ADDITION TO THIS DOCUMENT IS A VIOLATION OF SECTION 7209 OF THE NEW YORK STATE EDUCATION LAW.

THESE DOCUMENTS (OR COPIES OF ANY THEREOF) PREPARED BY OR BEARING THE SEAL OF THE ENGINEER, SHALL NOT BE REUSED FOR ANY EXTENSIONS OF THE PROJECT OR ANY OTHER PROJECT WITHOUT THE WRITTEN CONSENT OF THE ENGINEER.

CAMERON ENGINEERING & ASSOCIATES, LLP
100 Sunnyside Boulevard, Suite 100 Woodbury, NY 11797 PH: (516) 827-4900 FX: (516) 827-4920
260 Madison Avenue, 8th Floor New York, NY 10016 PH: (212) 286-4000 FX: (646) 216-2001

COPYRIGHT

PROJECT NAME: JEWISH CONGREGATION OF BROOKVILLE

PROJECT LOCATION: INC. VILLAGE OF MUTTONTOWN NASSAU COUNTY, NY

TITLE: CONSTRUCTION PLAN STATION 8+50 TO 18+00

DISCIPLINE: TRAFFIC

NYSDOT CASE 06–058P SECT. 15 BLOC A LOTS 2429 & 2430

PROJECT ENGINEER: JDB	PROJECT NO. CE1064N
DESIGNED BY: JDB	JOB NO. CE1064N
DRAWN BY: LMB	DATE: JUNE 2008
CHECKED BY: AJK	SCALE: AS SHOWN

DRAWING NO. C1

SHEET 4 OF 10

CE1064N CONSTRUCTION PLAN.dwg, Layout1, 1/6/2011 12:53:20 PM, lberman

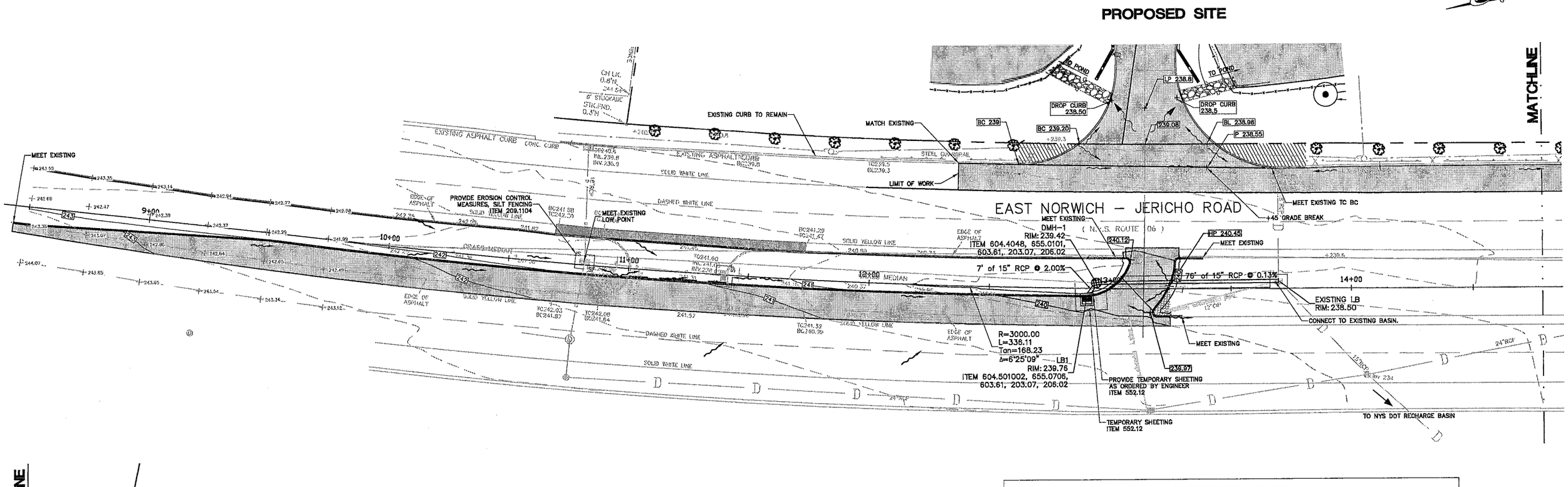

STRUCTURE TABLE

STRUCTURE NAME:	RIM/GRATE ELEV:	PIPES:	STRUCTURE ITEM No.	FRAMES GRATES & COVERS ITEM No.	PIPES ITEM No.
DMH-1	239.42	15" RCP INV IN =236.06 (SW) 15" RCP INV OUT =234.72 (E)	ITEM 604.4048	ITEM 655.0101	ITEM 603.61
EXISTING LB	238.50	15" RCP INV IN =234.62 (W) 15" RCP INV IN =234.62 (SE) 15" RCP INV OUT =234.62 (N)			
LB1	239.76	15" RCP INV OUT =236.20 (NE)	ITEM 604.501002	ITEM 655.0706	ITEM 603.61

LEGEND (PROPOSED)

- FLOW ARROW
- LEACHING BASIN
- DRAINAGE MANHOLE

GRAPHIC SCALE

20 0 10 20 40

(IN FEET)
HORIZ. 1 inch = 20 ft.

PERMIT DRAWINGS

DATE	REVISION DESCRIPTION	INT.
5/12/08	DOT COMMENTS	JDB
8/5/8	DOT COMMENTS	JDB
12/18/8	TOWN COMMENTS	JDB
1/06/09	TOWN COMMENTS	JDB
10/08/09	DOT COMMENTS	JDB
6/25/10	DOT COMMENTS	JDB
10/22/10	DOT COMMENTS	JDB

UNAUTHORIZED ALTERATION OR ADDITION TO THIS DOCUMENT IS A VIOLATION OF SECTION 7209 OF THE NEW YORK STATE EDUCATION LAW.

THESE DOCUMENTS (OR COPIES OF ANY THEREOF) PREPARED BY OR BEARING THE SEAL OF THE ENGINEER, SHALL NOT BE REUSED FOR ANY EXTENSIONS OF THE PROJECT OR ANY OTHER PROJECT WITHOUT THE WRITTEN CONSENT OF THE ENGINEER.

CAMERON ENGINEERING & ASSOCIATES, LLP
103 Sunnyside Boulevard, Suite 100
Woodbury, NY 11797
PH: (516) 827-4900 FX: (516) 827-4920
260 Madison Avenue, 8th Floor
New York, NY 10016
PH: (212) 326-4000 FX: (646) 215-2001

COPYRIGHT

PROJECT NAME:
JEWISH CONGREGATION OF BROOKVILLE

PROJECT LOCATION:
INC. VILLAGE OF MUTTONTOWN
NASSAU COUNTY, NY

TITLE:
GRADING & DRAINAGE PLAN

DISCIPLINE:
TRAFFIC

NYSDOT CASE 06-058P
SECT. 15 BLOC A LOTS 2429 & 2430

PROJECT ENGINEER: JDB	PROJECT NO. CE1064N	DRAWING NO.	
DESIGNED BY: JDB	JOB NO. CE1064N	G1	
DRAWN BY: LMB	DATE: JUNE 2008		
CHECKED BY: AJK	SCALE: AS SHOWN	SHEET 5 OF 10	

CE1064N G&D PLAN.dwg, CE1306A-GRADING DRAINAGE PLAN, 1/6/2011 12:53:41 PM, lberman

ESTIMATE OF QUANTITIES

NYSDOT ITEM NO.	DESCRIPTION	UNIT	QUANTITY
201.08	CLEARING AND GRUBBING	LS	1
203.02	EXCAVATION	CY	605
203.07	SELECT GRANULAR FILL	CY	72
208.02	TRENCH AND CULVERT EXCAVATION	CY	76
209.1104	CHECK DAM, SILT FENCE – TEMPORARY	FT	111
209.22	CONSTRUCTION ENTRANCE	SY	78
304.10119917	SUBBASE COURSE	CY	228
402.098301	TOP COURSE	TON	174
402.198901	BINDER COURSE	TON	194
402.378901	BASE COURSE	TON	426
407.0101	TACK COAT	GAL	87
490.10	PRODUCTION COLD-MILL SURFACE PLANING OF BITUMINOUS CONCRETE	SY	128
552.12	TEMPORARY TIMBER SHEETING	SF	374
603.81	REINFORCED CONCRETE PIPE CLASS IV	LF	80
604.4048	ROUND PRECAST MANHOLE	FT	5
604.501002	TYPE B-1 LEACHING BASIN	EA.	1
606.64	REMOVING AND STORING BOX BEAM GUIDE RAILING	LF	370
609.0901	TYPE VF150 CURB	LF	56
609.0902	MOUNTABLE CURB	LF	979
610.0203	TURF ESTABLISHMENT	ACRE	0.035
611.010114	8-10' HT, B&B, DECIDUOUS TREES, 25' O.C.	EA	13
613.02	TOPSOIL	CY	58
619.01	BASIC WORK ZONE TRAFFIC CONTROL	LS	1
645.5102	GROUND-MOUNTED SIGN PANELS LESS THAN OR EQUAL TO 30 SF WITH Z-BARS	SF	897
655.0101	FRAMES AND GRATES (CASTINGS)	SF	20
655.0708	CAST FRAME F3, UNMOUNTABLE CURB BOX CU3 & RETICULINE GRATE G3	EA.	1
687.0101	SOLID EDGE OR LANE LINE (WHITE)	LF	459
687.0101	SKIP LANE LINE (WHITE)	LF	110
687.0101	DOTTED LANE LINE (WHITE)	LF	68
687.0101	HATCH LINES (WHITE)	LF	40
687.0201	SOLID EDGE OR LANE LINE (YELLOW)	LF	1214
688.01	STOP BAR (WHITE)	LF	168
688.04	PAVEMENT SYMBOLS	EA.	4
10520.09	SAW CUT PAVEMENT	LF	1280
10804.0721	ALTERING DRAINAGE STRUCTURES	EA	1

NOTE:
TOTAL QUANTITY OF ITEMS 610.0203 "TURF ESTABLISHMENT" AND 613.02 "TOPSOIL TYPE A" SHALL INCLUDE PROPERTY FRONTAGE IN NYS ROW WHERE ANY SITE CLEARING WILL OCCUR.

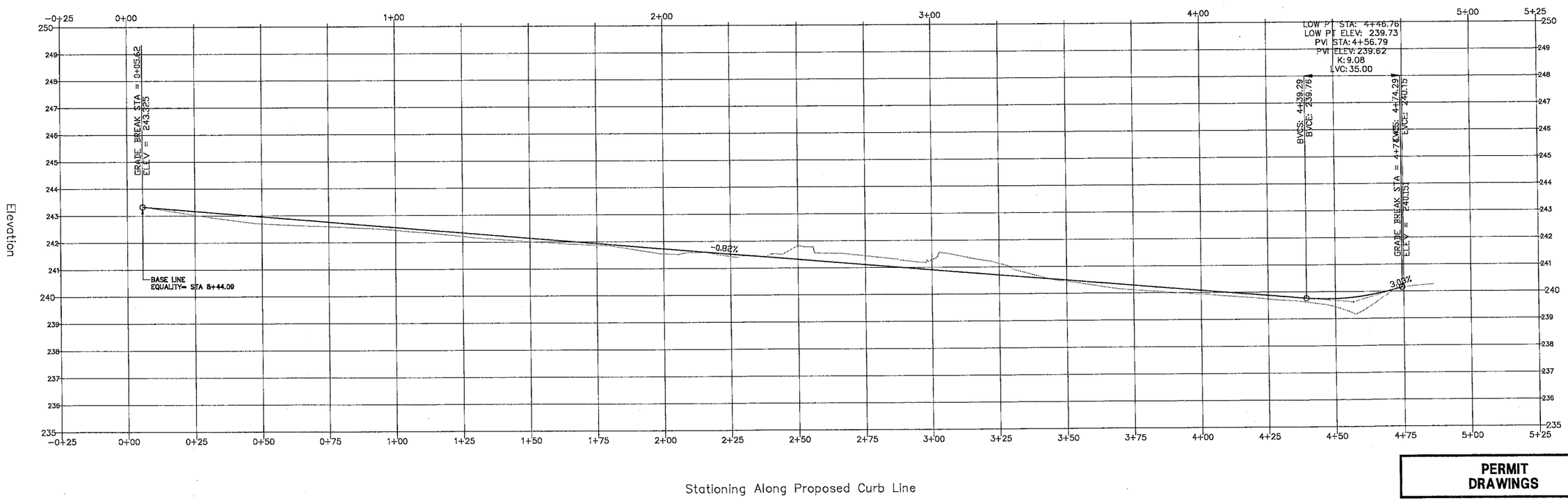

PERMIT DRAWINGS

NO.	DATE	REVISION DESCRIPTION	INT.
1	5/12/08	DOT COMMENTS	JDB
2	8/5/8	DOT COMMENTS	JDB
3	12/18/8	TOWN COMMENTS	JDB
4	1/06/09	TOWN COMMENTS	JDB
5	10/08/09	DOT COMMENTS	JDB
6	6/25/10	DOT COMMENTS	JDB
7	10/22/10	DOT COMMENTS	JDB

UNAUTHORIZED ALTERATION OR ADDITION TO THIS DOCUMENT IS A VIOLATION OF SECTION 7209 OF THE NEW YORK STATE EDUCATION LAW.

THESE DOCUMENTS (OR COPIES OF ANY THEREOF) PREPARED BY OR BEARING THE SEAL OF THE ENGINEER, SHALL NOT BE REUSED FOR ANY EXTENSIONS OF THE PROJECT OR ANY OTHER PROJECT WITHOUT THE WRITTEN CONSENT OF THE ENGINEER.

CAMERON ENGINEERING & ASSOCIATES, LLP
100 Sunnyside Boulevard, Suite 100 Woodbury, NY 11797 PH: (516) 827-4900 FX: (516) 827-4920
280 Madison Avenue, 8th Floor New York, NY 10016 PH: (212) 324-6000 FX: (646) 216-3001
COPYRIGHT

PROJECT NAME:
JEWISH CONGREGATION OF BROOKVILLE

PROJECT LOCATION:
INC. VILLAGE OF MUTTONTOWN
NASSAU COUNTY, NY

TITLE:
PROPOSED LEFT TURN CURB LINE PROFILE

DISCIPLINE:
TRAFFIC

NYSDOT CASE 06-058P
SECT. 15 BLOC A LOTS 2428 & 2430

PROJECT ENGINEER:	PROJECT NO.	DRAWING NO.
JDB	CE1064N	G2
DESIGNED BY: JDB	JOB NO. CE1064N	
DRAWN BY: LMB	DATE: JUNE 2008	SHEET 6 OF 10
CHECKED BY: AJK	SCALE: AS SHOWN	

CE1064N G&D PLAN.dwg, CE1306A-GRADING DRAINAGE PLAN (2), 1/6/2011 12:53:50 PM, lberman

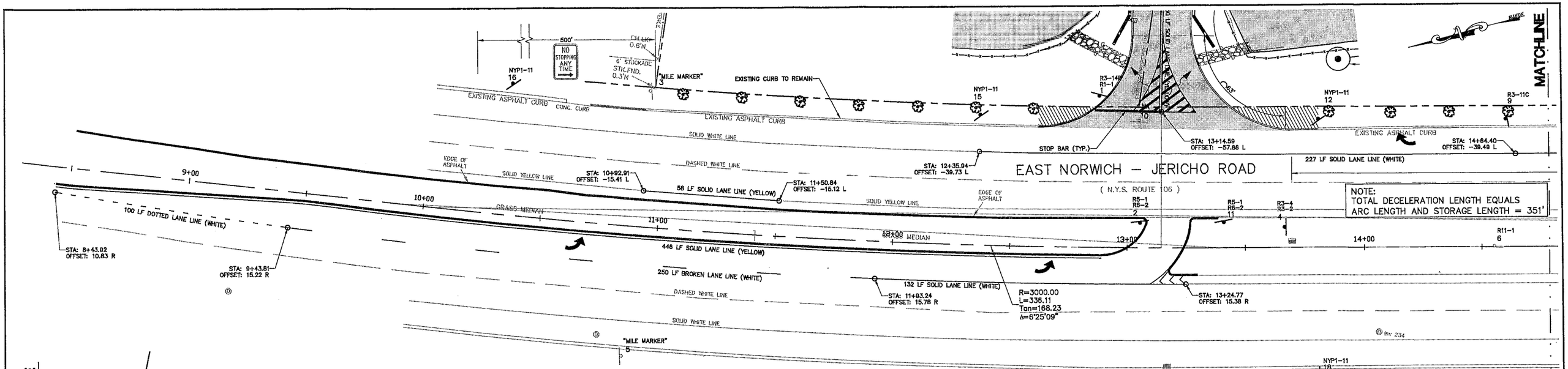

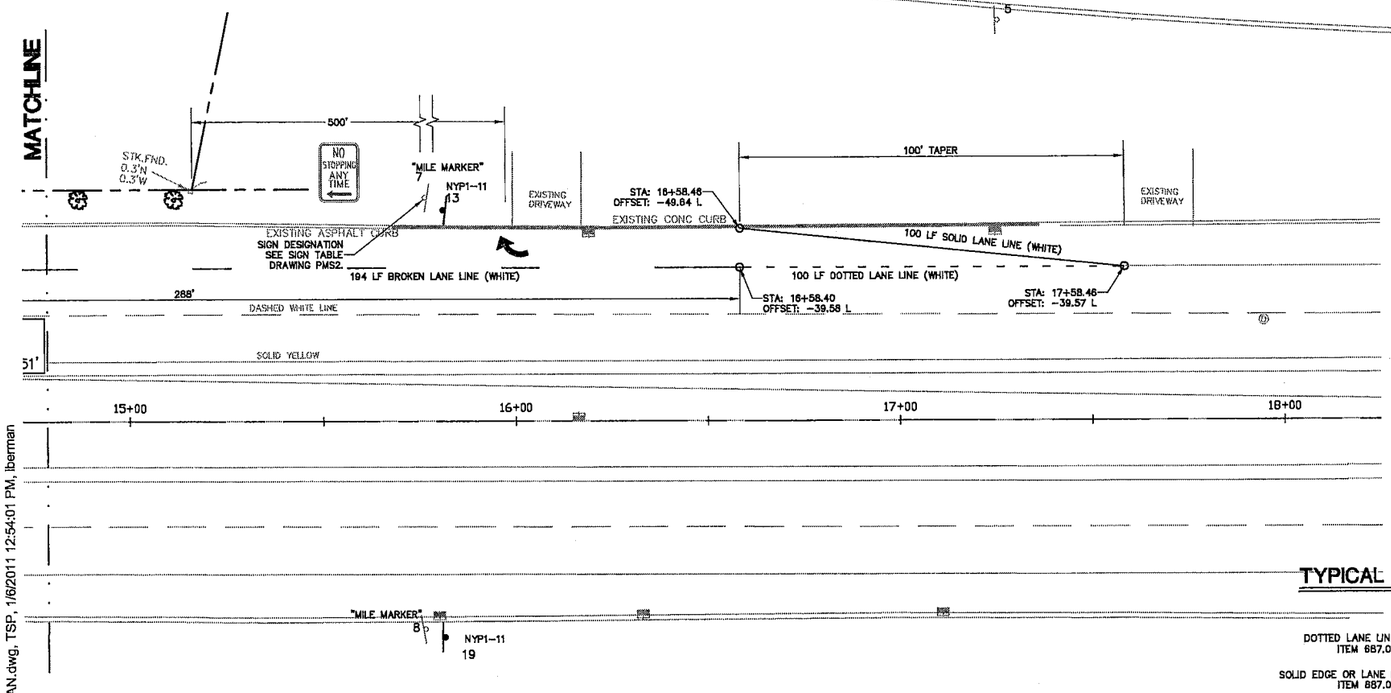

SIGN TABLE

ITEM	NUM	SIGN 1 LEGEND	DIMENSION SIGN 1	MUTCD CODE SIGN 1	SIGN 2 LEGEND	DIMENSION SIGN 2	MUTCD CODE SIGN 2	EXISTING OR PROPOSED
645.5102	1	STOP	30X30	R1-1	ALL TRAFFIC	24X30	R3-14B	Single Proposed
645.5102	2	ONE WAY	36X12	R6-2	DO NOT ENTER	30X30	R5-1	Double Proposed
	3	106 0301 1084		"MILE MARKER"				Single Existing
645.5102	4	NO LEFT TURN	24X24	R3-2	NO U TURN	24X24	R3-4	Single Proposed
	5	106 0301 1084		"MILE MARKER"				Single Existing
	6	STATE LAW KEEP OFF MEDIAN	24X30	R11-1		12X12		Double Existing
	7	106 0301 1083	–	"MILE MARKER"				Single Existing
	8	106 0301 1083	–	"MILE MARKER"				Single Existing
645.5102	9	RIGHT LANE MUST TURN RIGHT	24X30	R3-11C				Single Proposed
	10	NO DUMPING VIOLATORS WILL BE PROSECUTED	NA	NA				Single Existing
645.5102	11	ONE WAY	36X12	R6-2	DO NOT ENTER	30X30	R5-1	Double Proposed
645.5102	12	NO STOPPING ANY TIME	12X18	NYP1-11				Single Proposed
645.5102	13	NO STOPPING ANY TIME	12X18	NYP1-11				Single Proposed
645.5102	14	NO STOPPING ANY TIME	12X18	NYP1-11				Single Proposed
645.5102	15	NO STOPPING ANY TIME	12X18	NYP1-11				Single Proposed
645.5102	16	NO STOPPING ANY TIME	12X18	NYP1-11				Single Proposed
645.5102	17	NO STOPPING ANY TIME	12X18	NYP1-11				Single Proposed
645.5102	18	NO STOPPING ANY TIME	12X18	NYP1-11				Single Proposed
645.5102	19	NO STOPPING ANY TIME	12X18	NYP1-11				Single Proposed
645.5102	20	NO STOPPING ANY TIME	12X18	NYP1-11				Single Proposed

TYPICAL PAVEMENT STRIPING DETAILS

SCALE: NTS

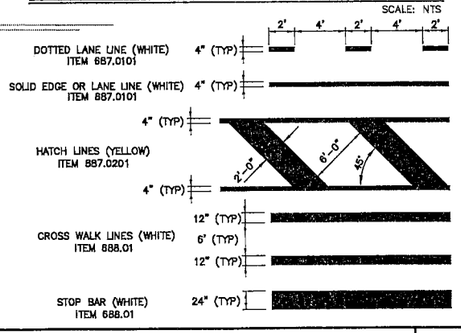

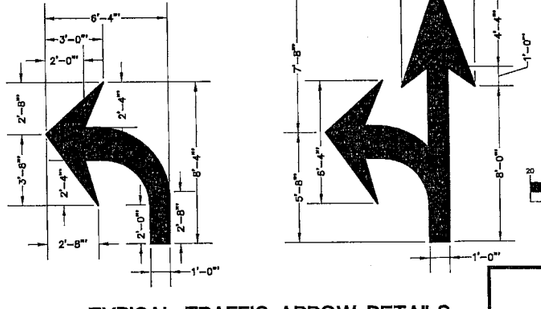

TYPICAL TRAFFIC ARROW DETAILS

ITEM 668.04 SCALE: NTS

GRAPHIC SCALE

20 0 10 20 40

(IN FEET)
HORIZ. 1 inch = 20 ft.

PERMIT DRAWINGS

PAVEMENT MARKING NOTES

1. ALL PAVEMENT MARKINGS SHALL CONFORM TO THE REQUIREMENTS OF THE FEDERAL MANUAL OF UNIFORM TRAFFIC CONTROL DEVICES.
2. ALL CROSSWALKS, STOP LINES, & PAVEMENT SYMBOLS SHALL BE WHITE PREFORMED REFLECTORIZED MATERIAL MEETING THE REQUIREMENTS OF THE NYSDOT.
3. ALL OTHER PAVEMENT MARKINGS SHALL BE REFLECTORIZED THERMOPLASTIC MATERIAL MEETING THE REQUIREMENTS OF NYSDOT.
4. THE CONTRACTOR SHALL REMOVE ALL CONFLICTING PAVEMENT MARKINGS AND SHALL REPLACE ANY DAMAGED PAVEMENT MARKINGS OR SIGNS AS ORDERED BY THE ENGINEER.

NO.	DATE	REVISION DESCRIPTION	INT.
1	5/12/08	DOT COMMENTS	JDB
2	8/5/8	DOT COMMENTS	JDB
3	12/18/8	TOWN COMMENTS	JDB
4	1/06/09	TOWN COMMENTS	JDB
5	10/08/09	DOT COMMENTS	JDB
6	6/25/10	DOT COMMENTS	JDB
7	10/22/10	DOT COMMENTS	JDB

UNAUTHORIZED ALTERATION OR ADDITION TO THIS DOCUMENT IS A VIOLATION OF SECTION 7209 OF THE NEW YORK STATE EDUCATION LAW.

THESE DOCUMENTS (OR COPIES OF ANY THEREOF) PREPARED BY OR BEARING THE SEAL OF THE ENGINEER, SHALL NOT BE REUSED FOR ANY EXTENSIONS OF THE PROJECT OR ANY OTHER PROJECT WITHOUT THE WRITTEN CONSENT OF THE ENGINEER.

CAMERON ENGINEERING & ASSOCIATES, LLP
100 Sunnyside Boulevard, Suite 100 Woodbury, NY 11797 PH: (516) 827-4900 FX: (516) 827-4920
260 Madison Avenue, 8th Floor New York, NY 10016 PH: (212) 324-4000 FX: (646) 316-3005
COPYRIGHT

PROJECT NAME:
JEWISH CONGREGATION OF BROOKVILLE

PROJECT LOCATION:
INC. VILLAGE OF MUTTONTOWN
NASSAU COUNTY, NY

TITLE:
PAVEMENT MARKING PLAN

DISCIPLINE:
TRAFFIC

NYSDOT CASE 06-058P
SECT. 15 BLOC A LOTS 2429 & 2430

PROJECT ENGINEER:	PROJECT NO.	DRAWING NO.
JDB	CE1064N	PMS1
DESIGNED BY: JDB	JOB NO. CE1064N	
DRAWN BY: LMB	DATE: JUNE 2008	
CHECKED BY: AJK	SCALE: AS SHOWN	SHEET 7 OF 10

CE1064N PAVEMENT MARKING PLAN.dwg, TSP, 1/6/2011 12:54:01 PM, iberman

MAINTENANCE AND PROTECTION OF TRAFFIC NOTES

1. MAINTENANCE AND PROTECTION OF TRAFFIC SHALL BE IN ACCORDANCE WITH THE FEDERAL MANUAL UNIFORM TRAFFIC CONTROL DEVICES, (MUTCD) HIGHWAY WORK ZONE TRAFFIC CONTROL AND NYS SUPPLEMENT.
2. THE CONTRACTOR SHALL BE RESPONSIBLE FOR ALL MAINTENANCE AND PROTECTION OF TRAFFIC. MAINTENANCE OF TRAFFIC SCHEMES SHALL BE IN ACCORDANCE WITH THE PLANS, THE NYSMUTCD AND AS APPROVED OR DIRECTED BY THE ENGINEER. TRAFFIC SCHEMES SHOWN ON THE PLANS OR IN THE NYSMUTCD ARE TO BE CONSIDERED MINIMUM REQUIREMENTS. THE ENGINEER MAY ORDER ADDITIONAL SIGNS, FLAGGERS, CONES, REFLECTORIZATION ETC. AS NECESSARY.
3. FOR THE WORK ZONE LAYOUT THE 85 PERCENT SPEED SHALL BE CONSIDERED THE POSTED SPEED PLUS 10 MPH.
4. THE CONTRACTOR SHALL NOT WORK ON BOTH SIDES OF THE ROADWAY IN THE SAME AREA AT THE SAME TIME.
5. UNLESS OTHERWISE PROVIDED IN THE CONTRACT DOCUMENTS, NO LANE CLOSINGS WILL BE PERMITTED FOR NYS ROADWAYS ON WEEKENDS.

   ALSO, NO LANE CLOSINGS WILL BE PERMITTED ON NYS ROADWAYS.
   –FROM NOON ON FRIDAY BEFORE MEMORIAL DAY THROUGH MEMORIAL DAY
   –INDEPENDENCE DAY
   –LABOR DAY
   –VETERANS DAY
   –INDEPENDENCE DAY
   –FROM NOON ON THE DAY BEFORE THANKSGIVING DAY THROUGH THE SUNDAY FOLLOWING THANKSGIVING DAY
   –THE DAY PRECEDING CHRISTMAS DAY
   –CHRISTMAS DAY
   –THE DAY BEFORE NEW YEARS DAY
   –NEW YEARS DAY

   AT OTHER TIMES LANE CLOSING RESTRICTIONS SHALL APPLY AS FOLLOWS:

   THE CONTRACTOR IS NOTIFIED THAT NO LANE CLOSURES WILL BE PERMITTED FOR ANY REASON BETWEEN THE HOURS:

   EAST NORWICH–JERICO ROAD (ROUTE 108) SOUTHBOUND FROM 7:00 AM TO 10:00 AM

   EAST NORWICH–JERICO ROAD (ROUTE 108) NORTHBOUND FROM 3:00 PM TO 7:00 PM

   AT OTHER TIMES, ONE LANE MAY BE CLOSED IN EACH DIRECTION. THE CONTRACTOR WILL NOT BE PERMITTED TO CLOSE MORE THAN ONE LANE IN ANY DIRECTION.

   NO LANE CLOSURES WILL BE PERMITTED ON NYS ROADWAYS DURING NON–DAYLIGHT HOURS, WITHOUT PRIOR APPROVAL. THE CONTRACTOR IS NOTIFIED THAT ALL LANES MUST BE OPEN TO TRAFFIC BEFORE 10AM AND AFTER 3PM . NO LANE CLOSINGS ARE PERMITTED FROM MEMORIAL DAY TO LABOR DAY. NIGHTTIME LANE CLOSINGS WILL NOT BE PERMITTED WITHOUT PRIOR APPROVAL FROM THE STATE PERMIT INSPECTOR.
6. THE FOLLOWING SHALL APPLY WHEN TRAVEL LANES ARE CLOSED: THE CONTRACTOR SHALL PLACE TWO PLASTIC DRUMS OR VERTICAL PANELS AT MAXIMUM 400 FT INTERVALS ADJACENT TO EACH OTHER IN THE MIDDLE OF EACH CLOSED LANE TO DISCOURAGE USE OF THE LANE BY VEHICLES. FOR THE FIRST 1000FT OF CLOSURE AND FOR THE FIRST 1000 FT AFTER EACH ENTRANCE RAMP WITHIN THE CLOSURE THIS INTERVAL SHALL BE REDUCED TO 200 FT. PLACEMENT OF THESE DRUMS OR VERTICAL PANELS SHALL BE IN ADDITION TO THE DEVICES SHOWN IN THE MAINTENANCE AND PROTECTION OF TRAFFIC SCHEMES OF THE MUTCD AND THOSE ON THE PLANS.
7. THE CONTRACTOR SHALL TAKE STEPS AS NECESSARY TO PREVENT THE CHANNELING DEVICES FROM BEING BLOW OVER OR DISPLACED BY PASSING VEHICLES. THE CONTRACTOR SHALL ACCOMPLISH THIS BY DOUBLING CONES, BY THE USE OF SAND BAG RINGS, OR BY OTHER SUCH MEANS AS MAY BE APPROVED BY THE ENGINEER WHICH SHALL PRESENT NO HAZARD TO MOTORISTS OR TO WORKERS.
8. THE CONTRACTOR MUST NOTIFY THE ENGINEER, THE LOCAL COUNTY DEPARTMENT OF PUBLIC WORKS, LOCAL PUBLIC SCHOOLS, THE LOCAL COUNTY POLICE DEPARTMENT, AND THE TOWN FIRE DEPARTMENTS OF ALL DETOURS, PROPOSED STREET CLOSINGS OR ANY WORK THAT MIGHT AFFECT THE MOBILITY OR ACCESS OF THE FIRE OR POLICE DEPARTMENT 72 HOURS IN ADVANCE OF THEIR IMPLEMENTATION. IN ADDITION, THE CONTRACTOR SHALL ENSURE THAT HYDRANTS ARE KEPT CLEAR.
9. WARNING SIGNS USED IN CONJUNCTION WITH WORK ZONE ACTIVITIES SHOULD HAVE FLUORESCENT ORANGE BACKGROUNDS CLASS D WITH BLACK LETTERING OR SYMBOLS.
10. THE CONTRACTOR SHALL REMOVE AND/OR COVER ANY CONFLICTING EXISTING SIGNS, ADBE.
11. THE CONTRACTOR SHALL USE A FLASHING ARROW BOARD, POSITIONED AT THE BEGINNING OF THE TAPER FOR ALL TRAVEL LANE CLOSINGS. ONE FLASHING ARROW BOARD WILL BE REQUIRED IN CONJUNCTION WITH ANY LANE CLOSURE.
12. THE CONTRACTOR SHALL MINIMIZE THE INTERRUPTION OF PEDESTRIAN TRAFFIC. THE SIDEWALK ON ONE SIDE OF THE ROADWAY SHALL REMAIN
    OPEN AND PASSABLE AT ALL TIMES. DURING THE RECONSTRUCTION OF THE SIDEWALKS, PEDESTRIAN SAFETY AND PROPERTY ACCESS MUST BE MAINTAINED AT ALL TIMES TO THE SATISFACTION OF THE ENGINEER.
13. ALL TEMPORARY SIGNS FOR MPT SHALL BE COVER WHEN NOT IN USE.
14. THE TRAVEL LANE SHALL BE SWEPT CLEAN BY THE CONTRACTOR BEFORE THE LANE IS REOPENED.
15. PROVISION FOR SNOW AND ICE REMOVAL OPERATIONS: IN ORDER TO ALLOW FOR SNOW AND ICE CONTROL BY STATE FORCES ON THE STATE HIGHWAYS AND BY LOCAL MUNICIPALITIES ON LOCAL ROAD, THE CONTRACTOR SHALL SCHEDULE HIS WORK IN ACCORDANCE WITH THE FOLLOWING:
    - INTERFERENCE WITH SNOW PLOWING OPERATIONS DRUMS, BARRICADES AND OTHER TRAFFIC CONTROL EQUIPMENT SHALL BE KEPT TO A MINIMUM. ANY DEVICES DISTURBED OR DAMAGED BY SNOW AND ICE CONTROL OPERATIONS SHALL BE REPLACED AND/ OR RESET AS NECESSARY AND AS SOON AS POSSIBLE BY THE CONTRACTOR AT HIS OWN COST.
    - DRAINAGE FRAMES, GRATES AND COVERS AND OTHER CASTINGS SHALL NOT BE ADJUSTED IN A TRAVEL LANE UNLESS THE FINAL PAVEMENT COURSE IS THE BE PLACED PRIOR TO THE ONSET OF SNOW AND ICE WEATHER. STEEL PLATES, ETC. SHALL NOT PROTRUDE ABOVE THE ADJACENT PAVEMENT. IF ANY OF THESE PROTRUSIONS EXIST IN A NON–TRAVEL LANE PRIOR TO A SNOW AND ICE CONDITION, THEN TEMPORARY ASPHALT RAMPS MUST BE PLACED SO THAT FOR EVERY 1 MM OF RISE, THERE IS AN 80 MM RUN OF RAMP.
    - ALL PAVEMENT CUTS SHALL BE RESTORED TO THE ADJACENT PAVEMENT GRADE TO ELIMINATE RECESSED AREAS WHERE SNOW CANNOT BE PLOWED OR WHERE THE PLOWS MAY SNAG.

PAVEMENT MARKING INSTALLATION

1. THE PAVEMENT MARKING CONTRACTOR SHALL CONFORM WITH THE FEDERAL MUTCD REQUIREMENTS FOR A MOVING WORK ZONE; SECTION 6H TA35.

NOTES

1. WHEN IN THE OPINION OF THE E.I.C., WHEN THE MINIMUM LANE WIDTH of 3.0 M (10 FT) CANNOT BE MAINTAINED DUE TO A SHOULDER CLOSURE, USE THE DETAIL FOR SHORT TERM SINGLE LANE CLOSURE.
2. NO WORK ACTIVITY OR STORAGE OF EQUIPMENT, VEHICLES, OR MATERIAL SHOULD OCCUR WITHIN A BUFFER SPACE. FOR ROLL AHEAD DISTANCE SEE TABLE 6C–2 ON THE LEGEND AND TABLES DRAWING (M619–11).
3. WHEN PAVED SHOULDERS HAVING A WIDTH OF 2.4 M(8 FT) OR MORE ARE CLOSED, CHANNELIZING DEVICES SHALL BE USED TO CLOSE THE SHOULDER IN ADVANCE TO DELINEATE THE BEGINNING OF THE WORK AREA AND TO DIRECT VEHICULAR TRAFFIC TO REMAIN IN THE TRAVEL WAY.
4. THE END ROAD WORK SIGN (G20–2) SHALL BE PLACED A MAXIMUM OF 150 M PAST THE END OF THE WORK AREA.
5. SHADOW OR BARRIER VEHICLES SHALL BE USED AT ANY TIME THE MINIMUM BUFFER SPACE SHOWN IN THE TYPICAL DETAILS CANNOT BE ACHIEVED AND WORKERS ARE PRESENT IN THE WORK AREA. A SEPARATE BARRIER VEHICLE SHALL BE PROVIDED FOR EACH CLOSED LANE AND EACH SHOULDER 2.4 M OR GREATER IN WIDTH. EXCEPTIONS TO THESES REQUIREMENTS MAY BE MADE WHERE THE BARRIER VEHICLE PLACEMENT WOULD BE INEFFECTIVE OR WOULD INTERFERE WITH THE SAFE OPERATION OF TRAFFIC. SEE TABLE NY1–A ON THE LEGEND AND TABLES DRAWING (M619–11) FOR USE REQUIREMENTS.
6. WHEN SIDE ROADS INTERSECT THE ROADWAY WITHIN THE WORK ZONE TRAFFIC CONTROL AREA, ADDITIONAL TTC DEVICES SHALL BE PLACED AS ORDERED BY THE ENGINEER.

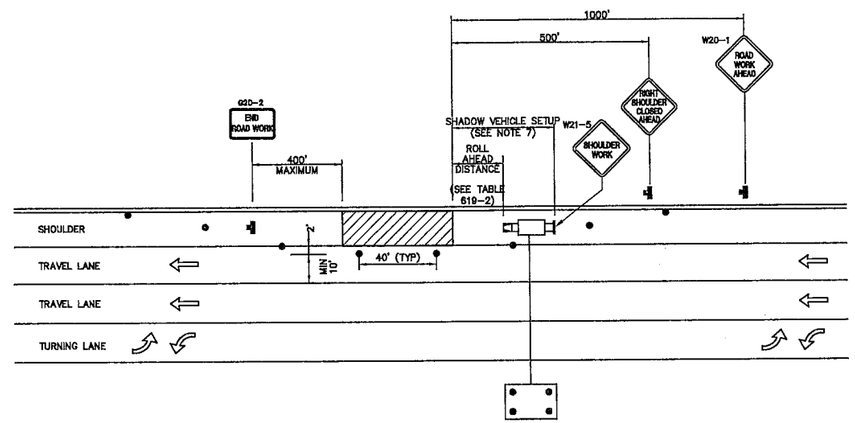

SHOULDER CLOSURE

SCALE: NTS

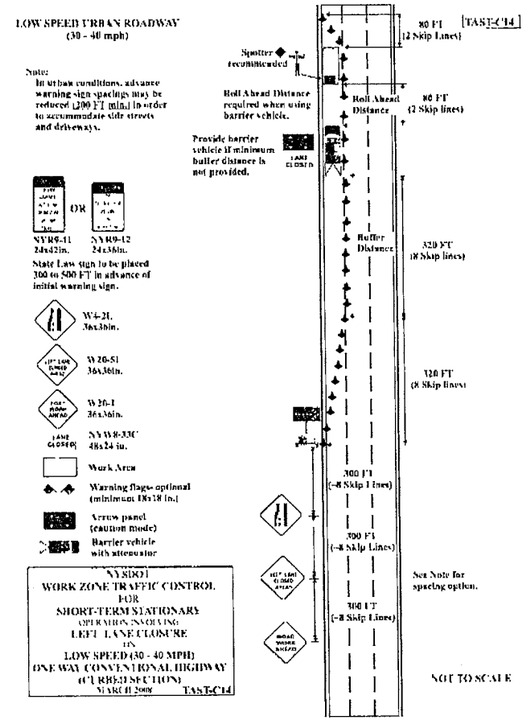

LEFT LANE CLOSURE

SCALE: NTS

1. DIMENSIONS SIMILAR FOR RIGHT LANE CLOSURE.

PERMIT DRAWINGS

NO.	DATE	REVISION DESCRIPTION	INT.
7	5/12/08	DOT COMMENTS	JDB
6	8/5/8	DOT COMMENTS	JDB
5	12/18/8	TOWN COMMENTS	JDB
4	1/05/09	TOWN COMMENTS	JDB
3	10/08/09	DOT COMMENTS	JDB
2	6/25/10	DOT COMMENTS	JDB
1	10/22/10	DOT COMMENTS	JDB

UNAUTHORIZED ALTERATION OR ADDITION TO THIS DOCUMENT IS A VIOLATION OF SECTION 7209 OF THE NEW YORK STATE EDUCATION LAW.

THESE DOCUMENTS (OR COPIES OF ANY THEREOF) PREPARED BY OR BEARING THE SEAL OF THE ENGINEER, SHALL NOT BE REUSED FOR ANY EXTENSIONS OF THE PROJECT OR ANY OTHER PROJECT WITHOUT THE WRITTEN CONSENT OF THE ENGINEER.

CAMERON ENGINEERING & ASSOCIATES, LLP
100 Sunnyside Boulevard, Suite 100 Woodbury, NY 11797 PH: (516) 827-4900 FX: (516) 827-4920
250 Madison Avenue, 8th Floor New York, NY 10016 PH: (212) 324-4000 FX: (646) 216-2021
COPYRIGHT

PROJECT NAME: JEWISH CONGREGATION OF BROOKVILLE

PROJECT LOCATION: INC. VILLAGE OF MUTTONTOWN NASSAU COUNTY, NY

TITLE: MAINTENANCE & PROTECTION TRAFFIC

DISCIPLINE: TRAFFIC

NYSDOT CASE 06–D58P SECT. 15 BLOC A LOTS 2429 & 2430

PROJECT ENGINEER: JDB	PROJECT NO. CE1064N	DRAWING NO.	
DESIGNED BY: JDB	JOB NO. CE1064N	MPT1	
DRAWN BY: LMB	DATE: JUNE 2008		
CHECKED BY: AJK	SCALE: AS SHOWN	SHEET 8 OF 10	

J:\CE1064N TRAFFIC\CE1064N MPT.dwg, T, 1/6/2011 12:55:14 PM, lberman

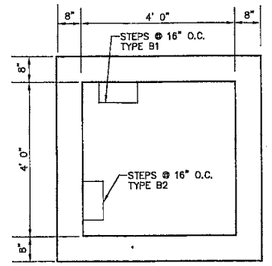

PLAN

NOTE "A" 2' 0" WITHOUT CURB BOX
2' 6" WITH CURB BOX

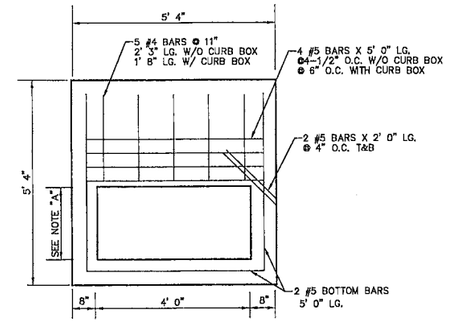

TOP SLAB – TYPE B2

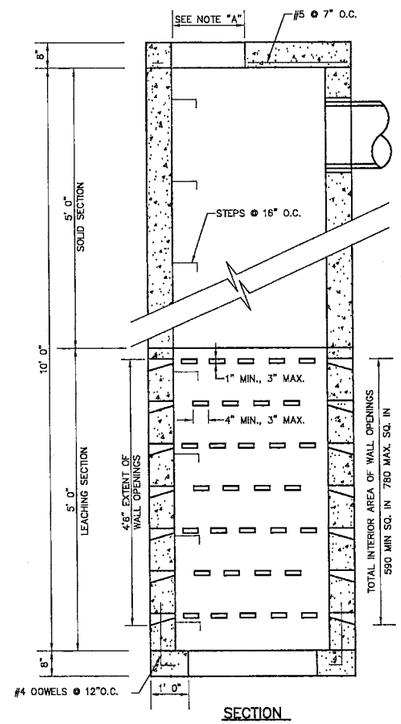

SECTION

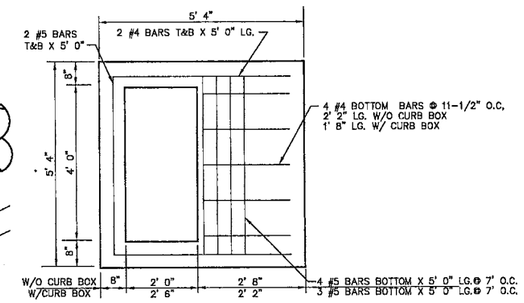

TOP SLAB – TYPE B1

SPECIFICATIONS

1. CONCRETE – 3000 PSI @ 28 DAYS
2. REBAR – ASTM A-615 GRADE 60 NYSDOT 709.01
3. MESH – ASTM A-185 SPEC 709.02
4. STEPS – COPOLYMER POLYPROPYLENE WITH 1/2" REBAR AS MANUFACTURED BY M.A. INDUSTRIES OR APPROVED EQUAL.
5. PRECAST CONCRETE UINTS SHALL CONFORM TO NTSDOT MATERIAL SPEC. 706-04

NOTE

1. REFER TO NYSDOT STANDARD SHEET 604-02, IN REGARDS TO THE GENERAL NOTES AND THE EXCAVATION AND SELECT GRANULAR BACKFILL LIMITS.

PRECAST CONCRETE TYPE B SPECIAL CATCH BASIN

ITEM 10604.501002M

SCALE: NTS

PERMIT DRAWINGS

DATE	REVISION DESCRIPTION	INT.
5/12/08	DOT COMMENTS	JDB
8/5/8	DOT COMMENTS	JDB
12/18/8	TOWN COMMENTS	JDB
1/06/09	TOWN COMMENTS	JDB
10/08/09	DOT COMMENTS	JDB
6/25/10	DOT COMMENTS	JDB
10/22/10	DOT COMMENTS	JDB

UNAUTHORIZED ALTERATION OR ADDITION TO THIS DOCUMENT IS A VIOLATION OF SECTION 7209 OF THE NEW YORK STATE EDUCATION LAW.

THESE DOCUMENTS (OR COPIES OF ANY THEREOF) PREPARED BY OR BEARING THE SEAL OF THE ENGINEER, SHALL NOT BE REUSED FOR ANY EXTENSIONS OF THE PROJECT OR ANY OTHER PROJECT WITHOUT THE WRITTEN CONSENT OF THE ENGINEER.

CAMERON ENGINEERING & ASSOCIATES, LLP
100 Sunnyside Boulevard, Suite 100 Woodbury, NY 11797 P/h: (516) 677-4900 F/X: (516) 677-4920
260 Madison Avenue, 8th Floor New York, NY 10016 P/h: (212) 324-4300 F/X: (646) 215-3001

COPYRIGHT

PROJECT NAME: JEWISH CONGREGATION OF BROOKVILLE

PROJECT LOCATION: INC. VILLAGE OF MUTTONTOWN NASSAU COUNTY, NY

TITLE: DETAILS

DISCIPLINE: TRAFFIC

NYSDOT CASE 06-058P
SECT. 15 BLOC A LOTS 2429 & 2430

PROJECT ENGINEER:	PROJECT NO.	DRAWING NO.
JDB	CE1064N	MD1
DESIGNED BY: JDB	JOB NO. CE1064N	
DRAWN BY: LMB	DATE: JUNE 2008	SHEET 9 OF 10
CHECKED BY: AJK	SCALE: AS SHOWN	

CE1064N DETAILS.dwg, CE1306A-DETAILS, 1/6/2011 12:55:27 PM, lberman

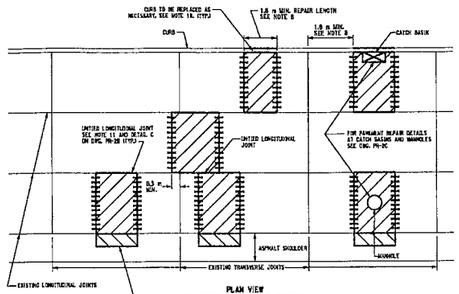

PLAN VIEW
CONCRETE PAVEMENT REPAIR
NOT TO SCALE
NOTE: THIS LANE CONFIGURATION IS SHOWN FOR PAVEMENT INFORMATION ONLY. IT MAY NOT NECESSARILY REFLECT THE CONFIGURATION IN THIS PROJECT.

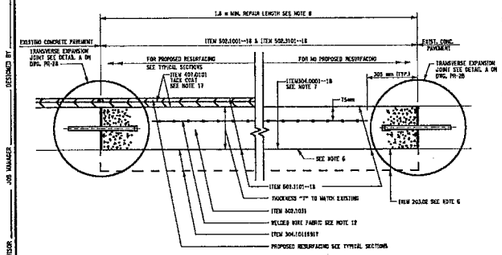

LONGITUDINAL SECTION
HES CONCRETE PAVEMENT REPAIR DETAIL
NOT TO SCALE

NOTES:

1. WITHIN THE LIMITS OF EACH WORK ZONE AND A MINIMUM OF TWO WEEKS PRIOR TO THE COMMENCEMENT OF FULL DEPTH REPAIRS, THE CONTRACTOR WILL RELIEVE LONGITUDINAL COMPRESSIVE STRESS IN THE PAVEMENT SYSTEM ABOVE, BY ONE OF THE FOLLOWING METHODS:

   FULL DEPTH REMOVAL OF UNDERPRESSURIZED FROM THE TRANSVERSE JOINTS ACROSS THE FULL WIDTH OF THE PAVEMENT SUFFICIENT TO ALLOW THE RELEASE OF 100mm OF LONGITUDINAL COMPRESSIVE STRAIN FOR EVERY 340 m OF PAVEMENT.

   AT LOCATIONS SHOWN ON THIS CONTRACT PLANS, OR WHERE ORDERED BY THE ENGINEER, A 100mm WIDE FULL DEPTH CUT SHALL BE MADE IN ONE COMPLETE UNINTERRUPTED OPERATION TRANSVERSELY ACROSS THE FULL WIDTH OF THE PAVEMENT, CURB AND GUTTER. THE INTERVAL BETWEEN CUTS SHALL BE 500M ± 10M.

   NO SEPARATE PAYMENT SHALL BE MADE FOR THIS WORK AND THE COST SHALL INCLUDED IN THE PRICE BID FOR VARIOUS ITEMS.

2. AFTER THE REMOVAL OF THE EXISTING PAVEMENT IN THE REPAIR AREA, THE ENGINEER WILL INSPECT THE EXISTING CONCRETE PAVEMENT TO DETERMINE IF ADDITIONAL DETERIORATION OR DAMAGE EXISTS.

3. [illegible]

4. [illegible]

5. PAVEMENT FOR SAW CUTTING AROUND TRANSVERSE AND CONSTITUDINAL THE CONCRETE REPAIR BOUNDARIES AND ANY ADDITIONAL SAW CUTS TO FACILITATE LIFT-OUT OR REMOVAL OF ADDITIONAL DETERIORATED CONCRETE PAVEMENT IS INCLUDED UNDER ITEM 502.3101-18. SAW CUTTING AROUND THE ASPHALT SHOULDER REPLACEMENT WILL BE MADE UNDER ITEM 505.01--10.

6. AS DETERMINED BY THE ENGINEER, UNSTABLE MATERIALS FOUND BENEATH THE REMOVED PAVEMENT SHALL BE REMOVED TO A MINIMUM DEPTH OF 300 MILLIMETERS UNDER THE ROLLER. THE ROLLER SHALL BE USED TO REMOVE THE TOP 300 MILLIMETERS. THE REMAINING 300 MILLIMETERS SHALL BE REMOVED WITH HAND TOOLS. ITEM 304.0101917 SHALL BE PLACED IN LIFTS NOT IN EXCESS OF 15 MILLIMETERS AND COMPACTED IN CONFORMANCE WITH N.Y.S.D.O.T. STANDARD SPECIFICATIONS, SECTION 203-3.13 "COMPACTION".

7. PAVEMENT FOR CURB REMOVAL IS INCLUDED UNDER ITEM 502.3101-18. PAYMENT FOR CURB REPLACEMENT WILL BE MADE UNDER THE CURB ITEM.

8. [illegible]

9. FOR THE RIGHT AND LEFT LANES WITHOUT OUTSIDE ADJACENT PANELS OR CURB, THE DOWEL BARS FROM THE OUTSIDE UNSUPPORTED EDGES SHALL BE 150mm OUT THE OFFSET FROM THE ADJACENT INTERIOR EDGES SHALL BE 300mm O.C. MONITOR THE SPACES BETWEEN WELL BEFORE SHALL BE ADJUSTED TO PROVIDE FOR 15 DOWELS ON EACH FACE OF THE REPAIR.

   FOR INTERIOR LANES WITH CONCRETE SLABS ON BOTH SIDES, ON OUTSIDE LANES WITH CURB AND INTERIOR LANES ON ONE SIDE, PLACE 13 DOWELS AT 300mm O.C. SPACING WITH THE END DOWELS 150mm OFF THE ADJACENT CONCRETE PANELS.

10. THE HOLE DIAMETER FOR THE DOWEL BAR SHALL BE IN ACCORDANCE WITH THE ANCHORED MATERIAL MANUFACTURER WRITTEN RECOMMENDATIONS. DOWEL BAR SHALL BE EPOXY COATED PER SUBSECTION 709-15. [illegible] MORTAR SHALL BE PLACED IN THE HOLE BEFORE INSERTING THE DOWEL. [illegible] THE PROTRUDING PORTION OF THE DOWEL BARS SHALL BE LIGHTLY GREASED.

11. [illegible]

12. USE EPOXY COATED WELDED WIRE FABRIC WW29-1600mm X 160mm MEETING THE REQUIREMENT OF SECTION 709-08 OF THE NYS STANDARD SPECIFICATIONS. PAYMENT FOR THE WELDED WIRE FABRIC IS INCLUDED UNDER ITEM 502.1031.

13. PRIOR TO PLACEMENT OF REPAIR CONCRETE, THE CONTRACTOR SHALL REMOVE ANY JOINT FILLER MATERIAL WHICH PROTRUDES ABOVE THE LEVEL OF THE ADJACENT EXISTING CONCRETE. NO CONCRETE SHALL BE PLACED UNLESS THE CONTOUR PROFILE OF THE JOINT FILLER MATERIAL MATCHES THAT OF THE EXISTING ADJACENT CONCRETE TO REMAIN. THE FORMS AT BOTHS OF REPAIR CONCRETE AGAINST EXISTING PAVEMENT SHALL BE SONOTUBES PARALLEL TO THE DIRECTION OF TRAVEL.

14. A LOUDERON TYPE POLYPROPYLENE BARRIER, WHOSE DIMENSIONS ARE 75mm LESS THAN THOSE OF THE REPAIR AREA ALL AROUND, SHALL BE SECURED TO THE SUBGRADE, ABOVE, PRIOR TO PLACEMENT OF REPAIR CONCRETE.

15. WHEN THE EXISTING PCC PAVEMENT IS NOT BEING RESURFACED ALL TRANSVERSE AND LONGITUDINAL JOINTS AT LIMITS OF AND WITHIN THE PAVEMENT REPAIR AREA SHALL BE SEALED, AND PAID FOR UNDER ITEM 600.7010018.

16. A MAXIMUM OF TWO DAYS BEFORE JOINT SEALING, UNDER ITEM 600.7010018, THE CONTRACTOR SHALL SANDBLAST AGAINST PAVEMENT. IT INCLUDED UNDER ITEM 600.7010018. A MINIMUM 40mm DEEP BY 10mm WIDE. THE CONTRACTOR SHALL USE FINE 3mm BLADES STARTED.

17. WHEN THE EXISTING PCC PAVEMENT IS BEING RESURFACED OR IF THE REPAIR AREA IS IN EXISTING CONCRETE PAVEMENT, ALL TRANSVERSE AND LONGITUDINAL JOINTS AT LIMITS OF AND WITHIN THE PAVEMENT REPAIR AREA SHALL BE SEALED AND PAID FOR UNDER ITEM 600.7010018. TACK COAT ITEM 407.0101 SHALL BE APPLIED BETWEEN ALL HMA COURSES.

18. PAYMENT FOR CURB REMOVAL IS INCLUDED UNDER ITEM 502.3101-18. PAYMENT FOR CURB REPLACEMENT WILL BE MADE UNDER THE CURB ITEM.

19. CONCRETE PAVEMENT REPAIRS ADJACENT TO EXISTING ASPHALT SHOULDERS WILL REQUIRE SHOULDER REMOVAL AND REPLACEMENT. SEE DETAIL F ON DRAWING PR-2B.

FED. ROAD REG. NO.	STATE	CONTRACT NO.	SHEET NO.	TOTAL SHEETS
1	N.Y.			
P.I.N.		R.I.N.	COUNTY	

ALL DIMENSIONS ARE IN m UNLESS OTHERWISE NOTED
AS BUILT REVISIONS
SIGNATURE DATE

HES CONCRETE
PAVEMENT REPAIR DETAILS

STATE OF NEW YORK
DEPARTMENT OF TRANSPORTATION
REGION 10

DOCUMENT NAME	DATE	DRAWING NO.
R10_pad_md.dgn	02/13/07	PR-2A

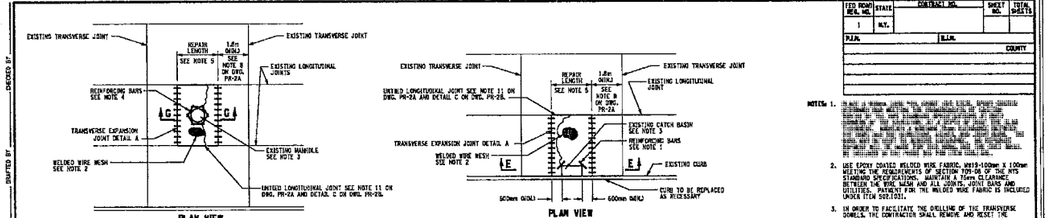

PLAN VIEW
CONCRETE PAVEMENT REPAIR AT EXISTING MANHOLE
NOT TO SCALE
NOTE: THIS LANE CONFIGURATION IS SHOWN FOR PAVEMENT INFORMATION ONLY. IT MAY NOT NECESSARILY REFLECT THE CONFIGURATION IN THIS PROJECT.

PLAN VIEW
CONCRETE PAVEMENT REPAIR AT EXISTING CATCH BASIN
NOT TO SCALE
NOTE: THIS LANE CONFIGURATION IS SHOWN FOR PAVEMENT INFORMATION ONLY. IT MAY NOT NECESSARILY REFLECT THE CONFIGURATION IN THIS PROJECT.

NOTES:

1. [illegible]

2. USE EPOXY COATED WELDED WIRE FABRIC, WW19-1100mm X 100mm MEETING THE REQUIREMENTS OF SECTION 709-08 OF THE NYS STANDARD SPECIFICATIONS. MAINTAIN A 75mm CLEARANCE BETWEEN THE WIRE MESH AND ALL JOINTS, JOINT BARS AND DOWELS. PAYMENT FOR THE WELDED WIRE FABRIC IS INCLUDED UNDER ITEM 502.1031.

3. IN ORDER TO FACILITATE THE SHELLING OF THE TRANSVERSE DOWELS, THE CONTRACTOR SHALL REMOVE AND RESET THE EXISTING FRAME AND GRATE/COVER. PAYMENT FOR THIS WORK WILL BE MADE UNDER ITEM 604.0701--10.

4. [illegible]

5. THE NOMINAL PAVEMENT REPAIR LENGTH AT CATCH BASINS OR MANHOLES SHALL BE THE FRAME OPENING LENGTH PLUS 1.2 METERS (600 mm ON EACH SIDE OF THE FRAME OPENING.

6. SEE DWG. PR-2B FOR ITEM DESCRIPTIONS.

7. SEE DWG. PR-2A FOR ADDITIONAL NOTES

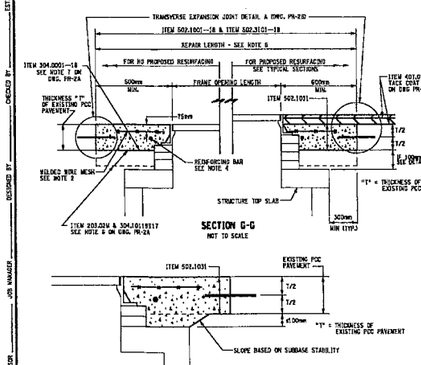

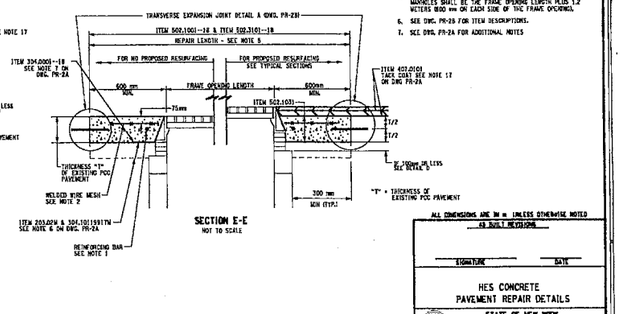

FED. ROAD REG. NO.	STATE	CONTRACT NO.	SHEET NO.	TOTAL SHEETS
1	N.Y.			
P.I.N.		R.I.N.	COUNTY	

ALL DIMENSIONS ARE IN m UNLESS OTHERWISE NOTED
AS BUILT REVISIONS
SIGNATURE DATE

HES CONCRETE
PAVEMENT REPAIR DETAILS

STATE OF NEW YORK
DEPARTMENT OF TRANSPORTATION
REGION 10

DOCUMENT NAME	DATE	DRAWING NO.
R10_pad_md.dgn	02/13/07	PR-2B

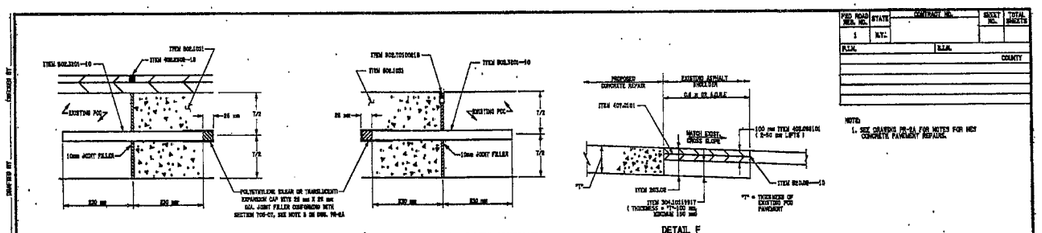

EXISTING PCC PAVEMENT IS BEING RESURFACED
EXISTING PCC PAVEMENT IS NOT BEING RESURFACED

DETAIL A
TRANSVERSE EXPANSION JOINT
(AT EXISTING PAVEMENT/NEW PAVEMENT INTERFACE)
NOT TO SCALE

DETAIL F
ASPHALT SHOULDER REPLACEMENT
WHEN EXISTING PCC PAVEMENT IS NOT BEING RESURFACED
(WHEN EXISTING PCC PAVEMENT IS BEING RESURFACED
SEE TYPICAL SECTIONS FOR DETAILS)
NOT TO SCALE

NOTE:
1. SEE DRAWING PR-2A FOR NOTES FOR NEW CONCRETE PAVEMENT REPAIRS.

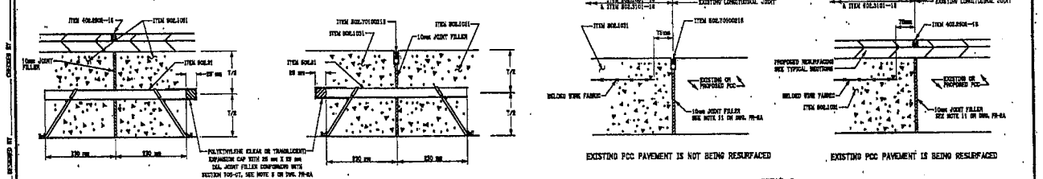

EXISTING PCC PAVEMENT IS BEING RESURFACED
EXISTING PCC PAVEMENT IS NOT BEING RESURFACED
EXISTING PCC PAVEMENT IS NOT BEING RESURFACED
EXISTING PCC PAVEMENT IS BEING RESURFACED

DETAIL B
TRANSVERSE EXPANSION JOINT
(AT NEW PAVEMENT/NEW PAVEMENT INTERFACE)
NOT TO SCALE

DETAIL C
LONGITUDINAL JOINT
(AT EXISTING PAVEMENT/NEW PAVEMENT INTERFACE)
NOT TO SCALE

"T" = THICKNESS OF EXISTING PCC PAVEMENT

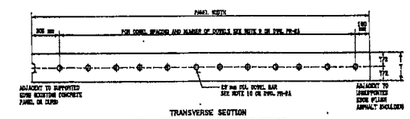

TRANSVERSE SECTION
CONCRETE PAVEMENT REPAIR DETAIL
NOT TO SCALE

ITEM	DESCRIPTION
105.02	UNCLASSIFIED EXCAVATION AND DISPOSAL
304.0201--13	FINE GRADING OF EXISTING SUBBASE
304.0101917	SUBBASE COURSE, TYPE 1011-2
400.8906-18	19 mm (¾ INCH) DOWEL BAR, NO DOWEL COMPACTION
402.8906111	PLANT PRODUCTION QUALITY ADJUSTMENT TO 400.8906101
406.8506--13	SAWING AND SEALING JOINTS IN NEW HOT MIX ASPHALT OVERLAYS USING HOT APPLIED SEALANT
407.0101	TACK COAT
509.0101--18	PORTLAND CEMENT CONCRETE REPAIR EVALUATION AND MARK OUT
600.1001	POLYMERICS, MODIFIED BASE REINFORCING, NONREINFORCED, GLASS FIBER, TYPE 1
600.3101--18	FULL-DEPTH PORTLAND CEMENT CONCRETE REPAIRS
600.3201--10	DRILL AND ANCHOR DOWELS FOR SALCON CHEMICAL ACCELERATED FULL DEPTH PCC PAVEMENT REPAIRS
600.7010018	REPLACING TRANSVERSE JOINTS IN PORTLAND CEMENT CONCRETE PAVEMENT
604.01	CONSTRUCTING TRANSVERSE JOINTS
605.0201--13	STRUCTURAL ASPHALT CONCRETE
604.0701--10	REPAIRING EXISTING DRAINAGE FRAMES OR EXISTING DRAINAGE STRUCTURES

ALL DIMENSIONS ARE IN m UNLESS OTHERWISE NOTED
AS BUILT REVISIONS
SIGNATURE DATE

HES CONCRETE
PAVEMENT REPAIR DETAILS

STATE OF NEW YORK
DEPARTMENT OF TRANSPORTATION
REGION 10

DOCUMENT NAME	DATE	DRAWING NO.
R10_pad_md.dgn	02/13/07	PR-2B

PERMIT DRAWINGS

NO.	DATE	REVISION DESCRIPTION	INT.
4	5/12/08	DOT COMMENTS	JDB
5	6/5/8	DOT COMMENTS	JDB
6	12/18/8	TOWN COMMENTS	JDB
7	1/06/09	TOWN COMMENTS	JDB
8	10/08/09	DOT COMMENTS	JDB
9	6/25/10	DOT COMMENTS	JDB
10	10/22/10	DOT COMMENTS	JDB

UNAUTHORIZED ALTERATION OR ADDITION TO THIS DOCUMENT IS A VIOLATION OF SECTION 7209 OF THE NEW YORK STATE EDUCATION LAW.

THESE DOCUMENTS (OR COPIES OF ANY THEREOF) PREPARED BY OR BEARING THE SEAL OF THE ENGINEER, SHALL NOT BE REUSED FOR ANY EXTENSIONS OF THE PROJECT OR ANY OTHER PROJECT WITHOUT THE WRITTEN CONSENT OF THE ENGINEER.

CAMERON ENGINEERING & ASSOCIATES, LLP
100 Sunnyside Boulevard, Suite 100
Woodbury, NY 11797
PH: (516) 827-4900 FX: (516) 827-4920
260 Madison Avenue, 8th Floor
New York, NY 10016
PH: (212) 286-4000 FX: (646) 216-2001
COPYRIGHT

PROJECT NAME:
JEWISH CONGREGATION OF BROOKVILLE

PROJECT LOCATION:
INC. VILLAGE OF MUTTONTOWN
NASSAU COUNTY, NY

TITLE:
DETAILS (2)

DISCIPLINE:
TRAFFIC

NYSDOT CASE 06-058P
SECT. 15 BLOC A LOTS 2429 & 2430

PROJECT ENGINEER:	PROJECT NO.	DRAWING NO.
JDB	CE1064N	MD2
DESIGNED BY: JDB	JOB NO. CE1064N	
DRAWN BY: LMB	DATE: JUNE 2008	SHEET 10 OF 10
CHECKED BY: AJK	SCALE: AS SHOWN	

CE1064N DETAILS.dwg, CE1306A-DETAILS (2), 1/6/2011 12:55:30 PM, lberman

SITE PLAN DRAWINGS

JEWISH CONGREGATION OF BROOKVILLE

NEW YORK STATE ROUTE 106
INCORPORATED VILLAGE OF MUTTONTOWN
NASSAU COUNTY, NEW YORK

DRAWING LIST

SURVEY OF PROPERTY	SHEET 1 OF 8
EXISTING CONDITIONS AND REMOVALS PLAN	SHEET 2 OF 8
SITE PLAN	SHEET 3 OF 8
GRADING DRAINAGE & UTILTY PLAN	SHEET 4 OF 8
SEDIMENT AND EROSION CONTROL PLAN	SHEET 5 OF 8
SITE DETAILS	SHEET 6 OF 8
SITE DETAILS 2	SHEET 7 OF 8
SANITARY SYSTEM PLAN	SHEET 8 OF 8
SITE PLANTING PLAN	L 1.00
EXISTING TREE REMOVAL PLAN	L 3.00

PREPARED BY :

CAMERON ENGINEERING
& ASSOCIATES, LLP

100 Sunnyside Boulevard, Suite 100
Woodbury, NY 11797
PH: (516) 827-4900 FX: (516) 827-4920

260 Madison Avenue, 8th Floor
New York, NY 10016
PH: (212) 324-4000 FX: (646) 216-2001

COPYRIGHT

MAY 2008
REVISED NOVEMBER 2009
REVISED MARCH 2010
REVISED JUNE 2010
REVISED SEPTEMBER 2010

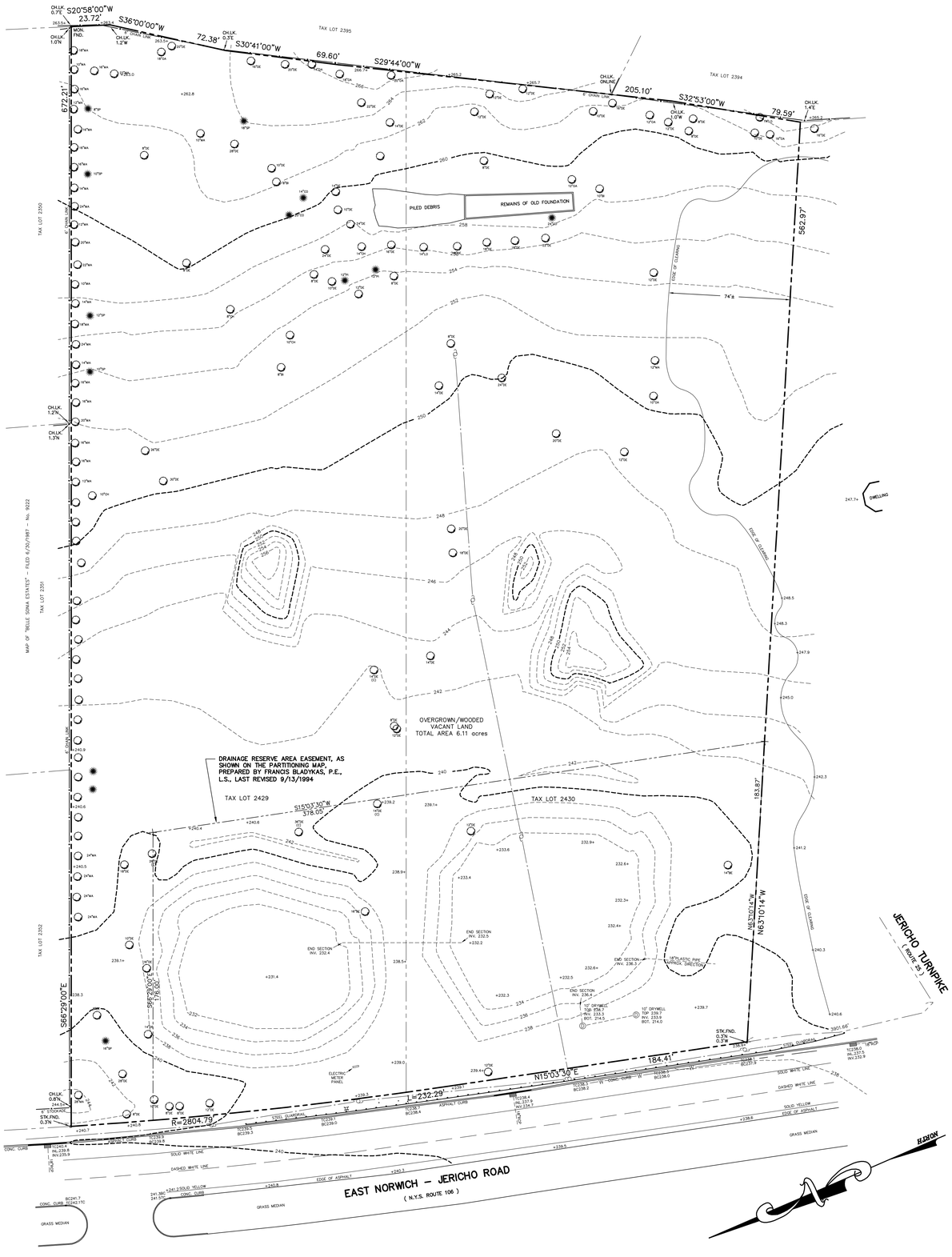

LEGEND

	DRAIN MANHOLE	DE	DECIDUOUS TREES
	UTILITY POLE	MA	MAPLE
	OVERHEAD WIRES	OA	OAK
	HYDRANT	LO	LOCUST
	BOLLARD	BI	BIRCH
	SIGN	CH	CHERRY
TC	TOP OF CURB	BE	BEECH
BC	BOTTOM OF CURB	CO	CONIFERS
+260.1	SPOT ELEVATION	CE	CEDAR
		PI	PINE
		SP	SPRUCE

SURVEY NOTES

1. UNAUTHORIZED ALTERATION OR ADDITION TO THIS SURVEY IS A VIOLATION OF SECTION 7209 OF THE NEW YORK STATE EDUCATION LAW. COPIES OF THIS SURVEY MAP NOT BEARING THE SURVEYOR'S INKED OR EMBOSSED SEAL SHALL NOT BE CONSIDERED TO BE A VALID TRUE COPY. CERTIFICATIONS INDICATED HEREON SHALL RUN ONLY TO THE PERSON/PERSONS FOR WHOM THE SURVEY IS PREPARED, AND ON HIS/HER/THEIR BEHALF TO THE TITLE COMPANY, GOVERNMENTAL AGENCY, AND LENDING INSTITUTION LISTED HEREON, AND TO THE ASSIGNEES OF THE LENDING INSTITUTION. CERTIFICATIONS ARE NOT TRANSFERABLE TO ADDITIONAL INSTITUTIONS OR SUBSEQUENT OWNERS. THIS SURVEY WAS PREPARED IN ACCORDANCE WITH THE CURRENT CODE OF PRACTICE FOR LAND SURVEYORS ADOPTED BY THE NEW YORK STATE ASSOCIATION OF PROFESSIONAL LAND SURVEYORS.
2. THIS SURVEY IS SUBJECT TO ANY EASEMENT OF RECORD AND OTHER PERTINENT FACTS WHICH A TITLE SEARCH MIGHT DISCLOSE.
3. OFFSETS SHOWN HEREON ARE FOR DESIGN AND/OR TITLE PURPOSES AND SHOULD NOT BE USED AS A BASIS FOR CONSTRUCTION OF FENCES OR OTHER STRUCTURES.
4. SUBSURFACE STRUCTURES AND/OR UTILITIES, IF ANY, NOT SHOWN.
5. HEDGE AND FENCE OFFSETS ARE TO CENTERLINE UNLESS OTHERWISE NOTED.
6. UTILITIES THAT ARE SHOWN WERE VISIBLE IN FIELD. DIRECTIONS AND STRUCTURE CONNECTIONS WERE ASSUMED AND SHOULD BE VERIFIED WITH RECORD MAP INFORMATION.
7. ELEVATIONS SHOWN ARE IN NASSAU COUNTY DATUM.

GRAPHIC SCALE

30 0 15 30 60 120

(IN FEET)

NO.	DATE	REVISION DESCRIPTION	INIT.
1	11/24/09	REVISED AND REISSUED FOR FEIS	MAD/LMB
2	12/21/09	REVISED PER NCPM COMMENTS	JH
3	06/24/10	REVISED PER FIRE MARSHALL	MAD
4	09/16/10	REVISED AND REISSUED FOR FEIS	MAD

PLOT SCALE:

UNAUTHORIZED ALTERATION OR ADDITION TO THIS DOCUMENT IS A VIOLATION OF SECTION 7209 OF THE NEW YORK STATE EDUCATION LAW.

THESE DOCUMENTS (OR COPIES OF ANY THEREOF) PREPARED BY OR BEARING THE SEAL OF THE ENGINEER, SHALL NOT BE REUSED FOR ANY EXTENSIONS OF THE PROJECT OR ANY OTHER PROJECT WITHOUT THE WRITTEN CONSENT OF THE ENGINEER.

CAMERON ENGINEERING & ASSOCIATES, LLP
100 Sunnyside Boulevard, Suite 100
Woodbury, NY 11797
PH: (516) 827-4900 FX: (516) 827-4920
330 Fifth Avenue, Suite 1300
New York, NY 10001
PH: (212) 324-6000 FX: (212) 489-3274

PROJECT NAME:
JEWISH CONGREGATION OF BROOKVILLE

PROJECT LOCATION:
INCORPORATED VILLAGE OF MUTTONTOWN
NASSAU COUNTY, NEW YORK

TITLE:
SURVEY OF PROPERTY

DISCIPLINE:
CIVIL

PROJECT ENGINEER:	PROJECT NO.	DRAWING NO.
JG	CE1064A	1
DESIGNED BY: MAD	JOB NO. CE1064L	
DRAWN BY: MAD	DATE: OCT. 2007	
CHECKED BY: JRA	SCALE: 1"=30'	SHEET 1 OF 8

O:\CE1064\Design\SURVEY.dwg, Layout1, 9/16/2010 11:02:13 AM, MDeguglis

GENERAL NOTES

1. BEFORE SUBMITTING A BID, THE CONTRACTOR SHALL VISIT THE PREMISES OF THE PROPOSED WORK AND SHALL CAREFULLY EXAMINE THE ENGINEERING DRAWINGS, EXISTING CONDITIONS AND LIMITATIONS THEREOF. VERIFICATION SHALL BE MADE AS TO THE ACTUAL LOCATIONS WHERE NEW EQUIPMENT AND STRUCTURES WILL BE ROUTED, COORDINATING NEW WORK AND PROVIDING CLEARANCES WITH STRUCTURAL MEMBERS. THE CONTRACTOR SHALL INCLUDE ALL COSTS OF ANY KIND WHATSOEVER WHICH ARE INCURRED THROUGH LIMITATIONS OF THE NEW CONDITIONS.
2. ALL WORK SHALL BE EXECUTED ACCORDING TO THE CONTRACT DOCUMENTS, INCLUDING THE DRAWINGS, SPECIFICATIONS AND ADDENDA, IF APPLICABLE, AS PROVIDED IN THE GENERAL CONDITIONS OF THE CONTRACT FOR CONSTRUCTION.
3. ALL WORK SHALL COMPLY WITH APPLICABLE FEDERAL, STATE, COUNTY AND LOCAL CODES, AND ALL REGULATORY AGENCIES.
4. ALL WORK, WHETHER SHOWN OR INFERRED, UNLESS SPECIFICALLY QUESTIONED, SHALL BE CONSIDERED FULLY UNDERSTOOD IN ALL RESPECTS BY THE CONTRACTOR, AND THE CONTRACTOR SHALL THEREBY BE RESPONSIBLE FOR ANY INTERPRETATIONS OR CONSEQUENCES THEREOF FOR ALL WORK ON ALL DRAWINGS.
5. THE OWNER'S REPRESENTATIVE SHALL BE NOTIFIED OF ANY DISCREPANCIES OR OMISSIONS WHICH COULD INTERFERE WITH THE SATISFACTORY COMPLETION OF THE WORK, PRIOR TO THE START OF ANY AND ALL WORK.
7. THE CONTRACTOR SHALL IN ALL RESPECTS COMPLY WITH ALL SCHEDULES, PHASING AND REGULATIONS OF THE OWNER. IT SHALL BE THE CONTRACTOR'S RESPONSIBILITY TO OBTAIN SUCH SCHEDULES, PHASING AND REGULATIONS FROM THE OWNER. IN THE EVENT OF CONFLICT BETWEEN SCHEDULES, PHASING AND REGULATIONS AND OTHER CONTRACT DOCUMENTS, THE OWNER'S REPRESENTATIVE SHALL BE CONSULTED PRIOR TO THE START OF ANY AND ALL WORK.
8. THE OWNER RESERVES THE RIGHT TO LET OTHER CONTRACTS IN CONNECTION WITH THE WORK OF THIS PROJECT. THE CONTRACTOR SHALL COOPERATE WITH OTHER CONTRACTORS AS REQUIRED TO CONFORM TO THE GENERAL CONSTRUCTION SCHEDULE AND SHALL AFFORD OTHER CONTRACTORS REASONABLE OPPORTUNITY FOR THE INTRODUCTION AND STORAGE OF THEIR MATERIALS AND EQUIPMENT AND THE EXECUTION OF THEIR WORK.
9. THE CONTRACTOR AND EACH SUBCONTRACTOR SHALL BE RESPONSIBLE FOR REVIEWING ALL DRAWINGS AND SPECIFICATIONS, AND NOTING ALL APPLICABLE WORK AS SHOWN OR INFERRED. ALL WORK AS SHOWN OR INFERRED SHALL BE INCLUDED IN THE COSTS, UNLESS NOTED AS AN "ALTERNATE".
10. THE CONTRACTOR SHALL FIRST COORDINATE AND THEN SUBMIT ALL SUBCONTRACTORS' SHOP DRAWINGS TO THE OWNER'S REPRESENTATIVE FOR REVIEW PRIOR TO WORK BEING PERFORMED.
11. ALL WORK SHALL CONFORM TO THE DRAWINGS AND SPECIFICATIONS AND SHALL BE OF NEW AND BEST QUALITY. NO MATERIAL SUBSTITUTIONS SHALL BE MADE, EXCEPT BY WRITTEN APPROVAL OF THE OWNER'S REPRESENTATIVE IN RESPONSE TO THE CONTRACTOR'S WRITTEN REQUEST.
12. ALL MANUFACTURED ARTICLES, MATERIALS AND EQUIPMENT SHALL BE SUPPLIED, INSTALLED, CONNECTED, ERECTED, USED, CLEANED AND CONDITIONED AS DIRECTED BY THE MANUFACTURERS, UNLESS OTHERWISE SPECIFIED ON THE DRAWINGS.
14. THE CONTRACTOR SHALL MAKE REPAIRS USING THE SAME MATERIALS, AT THE CONTRACTOR'S COST.
15. THE CONTRACTOR SHALL INCUR ALL COSTS AND BURDENS ASSOCIATED WITH LOST, STOLEN OR DAMAGED EQUIPMENT AND MATERIALS.
16. THE CONTRACTOR'S ATTENTION IS DIRECTED TO THE STATE OF NEW YORK DEPARTMENT OF LABOR, BOARD OF STANDARDS AND APPEALS INDUSTRIAL CODE RULE 53 – "CONSTRUCTION, EXCAVATION AND, DEMOLITION OPERATIONS AT OR NEAR UNDERGROUND FACILITES" EFFECTIVE APRIL 1, 1975. THE CONTRACT WILL BE REQUIRED TO COMPLY WITH ALL APPLICABLE REQUIREMENTS OF INDUSTRIAL CODE 53.
17. UTILITY FORCES, CONTRACTORS, OR OTHER PARTIES MAY BE EXPECTED TO BE WORKING WITHIN THE CONTRACT AREA DURING THE CONTRACT. IT SHALL BE THE RESPONSIBILITY OF THE CONTRACTOR TO COORDINATE HIS WORK UNDER THIS CONTRACT WITH THE WORK BEING DONE BY OTHERS IN ORDER THAT THE CONSTRUCTION MAY PROCEED IN AN EFFICIENT AND LOGICAL MANNER.
18. THE CONTRACTOR SHALL PROVIDE ALL BARRICADES, SIGNS, LIGHTS, ETC., FOR MAINTENANCE AND PROTECTION OF THE SITE AND VEHICULAR TRAFFIC AS REQUIRED FOR THE DURATION OF THIS CONTRACT.
19. THE CONTRACTOR SHALL RESTORE ALL DISTURBED EXISTING FEATURES TO A CONDITION EQUAL TO OR BETTER THAN CURRENTLY EXISTED.
20. THE CONTRACTOR SHALL FURNISH AND SUPPLY ALL NECESSARY EROSION CONTROL MEASURES, INCLUDING DUST CONTROL, IN ACCORDANCE WITH THE PROJECT DRAWINGS AND SPECIFICATIONS.
21. THE CONTRACTOR SHALL INCLUDE PROVISIONS FOR TEMPORARY UTILITY SERVICES AS NECESSARY FOR THE COMPLETE EXECUTION OF THE PROJECT.
22. THE CONTRACTOR SHALL COMPLY WITH THE LATEST OSHA CONFINED SPACE ENTRY REQUIREMENTS (29 CFR PART 1910)
23. THE CONTRACTOR SHALL COMPLY WITH THE LATEST REVISED OSHA SHEETING REQUIREMENTS (29 CFR PAR 1926.650,651,652)
24. THE CONTRACTOR SHALL BE RESPONSIBLE FOR ALL UNDERGROUND UTILITY MARK–OUTS PRIOR TO CONSTRUCTION.
25. COORDINATE ALL WORK WITH NYSDOT DRAWINGS.
26. THESE DRAWINGS ARE BASED ON THE FOLLOWING REFERENCES:

    TOPOGRAPHIC & BOUNDARY SURVEY
    PREPARED BY:
    JERRY P. LARUE
    LAND SURVEYOR
    PAWLING, NEW YORK 12564
    DATED: 1–10–05

DEMOLITION NOTES

1. REMOVAL OF EXISTING STRUCTURES, INCLUDING BUILDINGS, VEHICLES, DEBRIS, GARBAGE, DRAINAGE SYSTEMS AND OTHER STRUCTURES, IS TO BE DONE IN CONFORMANCE WITH THE REGULATIONS OF THE VILLAGE OF BROOKVILLE AND APPLICABLE COUNTY, STATE AND FEDERAL AGENCIES. THE CONTRACTOR IS RESPONSIBLE FOR OBTAINING ALL PERMITS FOR DEMOLITION AND DISPOSAL OF EXISTING STRUCTURES AND MATERIALS.
2. ALL STRUCTURES TO BE REMOVED INCLUDE, BUT ARE NOT LIMITED TO BUILDING FOUNDATIONS, SIGNS, FOOTINGS, CONCRETE SLABS, DRAINAGE STRUCTURES, CONCRETE WALKS, MANHOLES, LEACHING POOLS, FENCING, LIGHT POLES AND GUARD RAILS. ANY EXCAVATION RESULTING FROM DEMOLITION SHALL BE REPLACED WITH CLEAN, GRANULAR MATERIAL, COMPACTED TO 95% PROCTOR DENSITY.
3. THE CONTRACTOR SHALL EMPLOY APPROPRIATE MAINTENANCE AND PROTECTION OF TRAFFIC MEASURES DURING CONSTRUCTION, AS APPLICABLE. MEASURES UTILIZED DURING WORK ALONG BROOKVILLE ROAD SHALL BE IN ACCORDANCE WITH THE N.Y.S. MANUAL OF UNIFORM TRAFFIC CONTROL DEVICES.
4. THE CONTRACTOR SHALL NOTIFY APPROPRIATE UTILITIES 48 HOURS BEFORE EXCAVATING, CUTTING, REMOVING OR TAPPING INTO ANY EXISTING UTILITY SERVICE. THE VILLAGE OF BROOKVILLE SHALL BE NOTIFIED 48 HOURS BEFORE ANY SITE WORK BEGINS.
5. THE CONTRACTOR SHALL CONFIRM THAT ALL UTILITIES HAVE BEEN DISCONNECTED BY THE APPROPRIATE UTILITY COMPANY PRIOR TO REMOVAL/ABANDONMENT.
6. DEBRIS SHALL NOT BE BURIED ON THE SUBJECT SITE. ALL UNSUITABLE MATERIAL GARBAGE, AND DEBRIS SHALL BE DISPOSED OF IN ACCORDANCE WITH LOCAL VILLAGE, TOWN, COUNTY, STATE AND FEDERAL LAWS AND APPLICABLE CODES.
7. THE CONTRACTOR IS RESPONSIBLE FOR PROPER REMOVAL OF UNDERGROUND STORAGE TANKS, TRANSFORMERS, MATERIALS INSIDE THE TANKS, LINES AND BUILDINGS IN ACCORDANCE WITH ALL FEDERAL, STATE, COUNTY AND LOCAL LAWS AND REGULATIONS.

LEGEND

	DRAIN MANHOLE	DE	DECIDUOUS
	UTILITY POLE	MA	MAPLE
	OVERHEAD WIRES	OA	OAK
	HYDRANT	LO	LOCUST
	BOLLARD	BI	BIRCH
	SIGN	CH	CHERRY
TC	TOP OF CURB	BE	BEECH
BC	BOTTOM OF CURB	CO	CONIFERS
+260.1	SPOT ELEVATION	CE	CEDAR
		PI	PINE
		SP	SPRUCE

LIMIT OF ITEMS TO BE REMOVED

ITEM TO BE REMOVED

GRAPHIC SCALE

30 0 15 30 60 120

(IN FEET)

NO.	DATE	REVISION DESCRIPTION	INT.
1	11/24/09	REVISED AND REISSUED FOR FEIS	MAD/LMB
2	12/21/09	REVISED PER NCFM COMMENTS	JH
3	06/24/10	REVISED PER FIRE MARSHALL	MAD
4	09/16/10	REVISED AND REISSUED FOR FEIS	MAD

PLOT SCALE:

UNAUTHORIZED ALTERATION OR ADDITION TO THIS DOCUMENT IS A VIOLATION OF SECTION 7209 OF THE NEW YORK STATE EDUCATION LAW.

THESE DOCUMENTS (OR COPIES OF ANY THEREOF) PREPARED BY OR BEARING THE SEAL OF THE ENGINEER, SHALL NOT BE REUSED FOR ANY EXTENSIONS OF THE PROJECT OR ANY OTHER PROJECT WITHOUT THE WRITTEN CONSENT OF THE ENGINEER.

CAMERON ENGINEERING & ASSOCIATES, LLP
330 Sunnyside Boulevard, Suite 330
Woodbury, NY 11797
PH: (516) 827-4900 FX: (516) 827-4920
330 Fifth Avenue, Suite 1300
New York, NY 10001
PH: (212) 216-4000 FX: (212) 691-3274

PROJECT NAME:
JEWISH CONGREGATION OF BROOKVILLE

PROJECT LOCATION:
INCORPORATED VILLAGE OF MUTTONTOWN
NASSAU COUNTY, NEW YORK

TITLE:
EXISTING CONDITIONS AND REMOVALS PLAN

DISCIPLINE:
CIVIL

PROJECT ENGINEER:	PROJECT NO:	DRAWING NO.
JG	CE1064A	2
DESIGNED BY: MAD	JOB NO: CE1064L	
DRAWN BY: MAD	DATE: OCT. 2007	SHEET 2 OF 8
CHECKED BY: JRA	SCALE: 1"=30'	

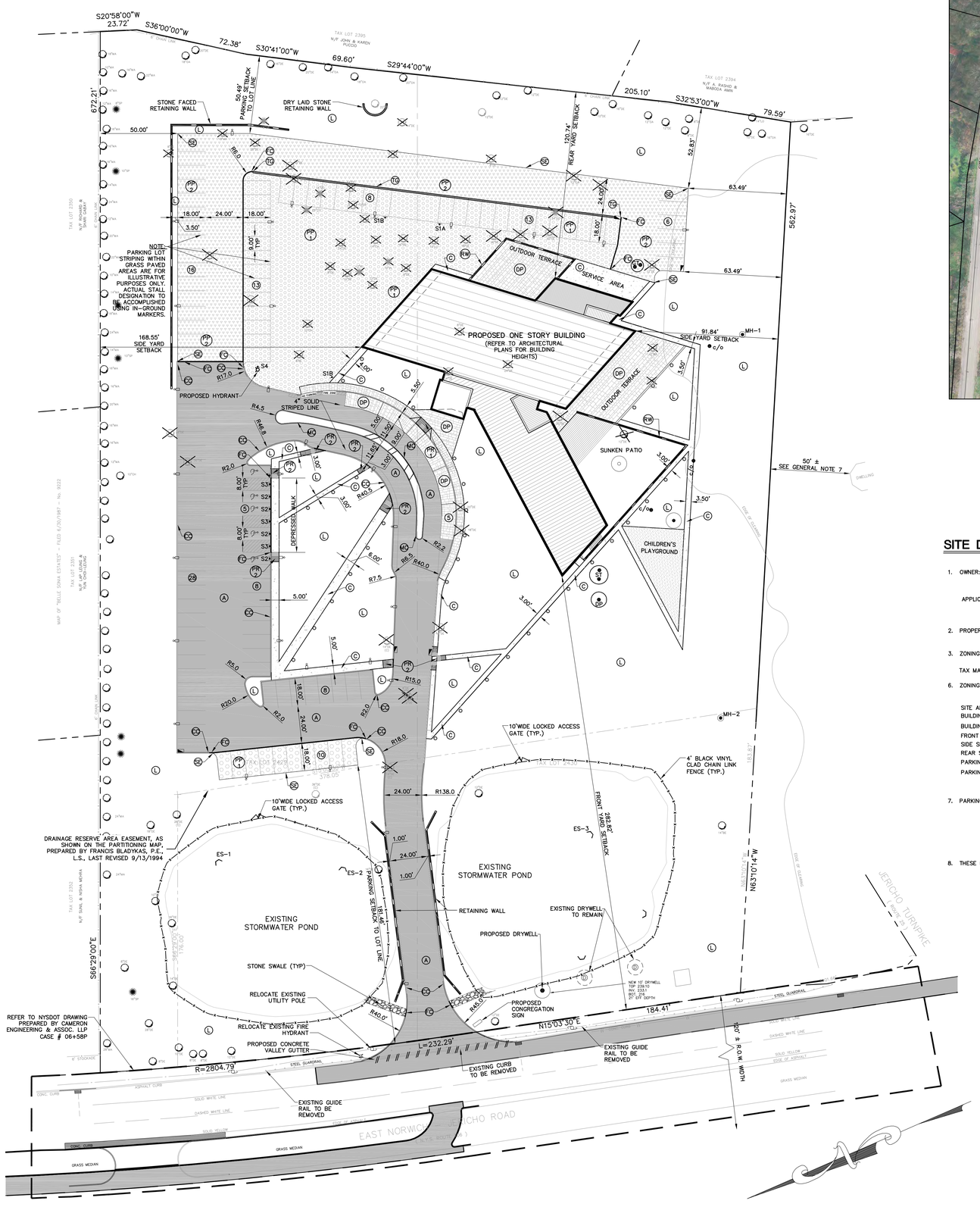

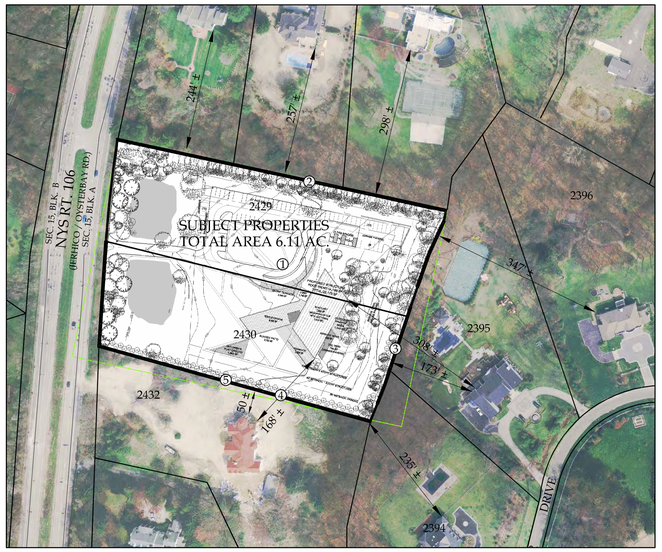

AREA MAP

SCALE: N.T.S.

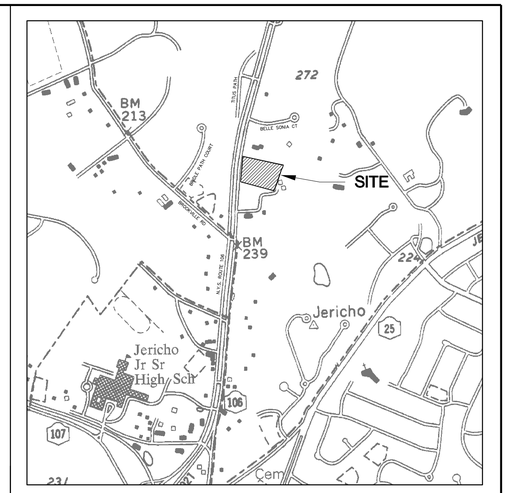

LOCATION MAP (SCALE: 1" = 1000')

SITE DATA

1. OWNER: JEWISH CONGREGATION OF BROOKVILLE
333 GLEN HEAD RD.
OLD BROOKVILLE, NY 11545

APPLICANT: JEWISH CONGREGATION OF BROOKVILLE
333 GLEN HEAD RD.
OLD BROOKVILLE, NY 11545

2. PROPERTY ADDRESS: EAST SIDE OF E. NORWICH RD./ JERICHO RD. (RT. 106)

3. ZONING: E-3 RESIDENTIAL

TAX MAP #: SECTION15, BLOCK. A, LOTS 2429 and 2430

6. ZONING DATA: (ARTICLE IV; 190-10; E)

	REQUIRED	PROVIDED
SITE AREA	2 ACRES	6.11 ACRES.
BUILDING COVERAGE	10% (26,615 SF)	5.33% (14,195 SF)
BUILDING HEIGHT	40'	35'-9"
FRONT SETBACK	110'	283'
SIDE SETBACK	50'	260'/92'
REAR SETBACK	50'	120'
PARKING SETBACK TO LOT LINE	30'	50'
PARKING SETBACK TO STREET LINE	20'	181'

7. PARKING DATA: 44 PAVED SPACES
66 GRASS PAVER SPACES
5 ENTRY PAVER SPACES
5 HANDICAP SPACES
120 TOTAL SPACES

8. THESE DRAWINGS ARE BASED ON THE FOLLOWING REFERENCES:
TOPOGRAPHIC & BOUNDARY SURVEY
PREPARED BY:
JERRY P. LARUE
LAND SURVEYOR
P.O. BOX 19
NEW HYDE PARK, NEW YORK 11040
DATED: 1-10-05

GENERAL NOTES

1. FOR ALIGNMENT, EASEMENTS AND IMPROVEMENTS-RELATED INFORMATION REFER TO SURVEY OF PROPERTY BY JERRY P. LaRUE, L.S., DATED JANUARY 10, 2005.
2. ALL ON-LOT MATERIALS AND METHODS OF CONSTRUCTION SHALL CONFORM TO THE STANDARDS AND SPECIFICATIONS OF THE VILLAGE OF MUTTONTOWN, NASSAU COUNTY AND STATE REGULATIONS AND APPLICABLE CODES.
3. THE CONTRACTOR IS RESPONSIBLE FOR OBTAINING ALL PERMITS FOR DEMOLITION AND DISPOSAL OF ANY EXISTING STRUCTURES AND MATERIALS. ALL EXISTING STRUCTURES TO BE REMOVED (FOUNDATIONS, UTILITIES, ETC.) SHALL BE REPLACED WITH CLEAN COMPACTED GRANULAR FILL, COMPACTED TO 95% STANDARD PROCTOR DENSITY IN 6" MAXIMUM LIFTS.
4. DEBRIS SHALL NOT BE BURIED ON THE SUBJECT SITE. ALL UNSUITABLE MATERIAL, PAVEMENT AND DEBRIS SHALL BE DISPOSED OF IN ACCORDANCE WITH LOCAL, COUNTY, STATE AND FEDERAL LAWS AND APPLICABLE CODES.
5. THE CONTRACTOR SHALL NOTIFY APPROPRIATE UTILITY COMPANIES 48 HOURS BEFORE EXCAVATING, CUTTING, REMOVING OR TAPPING INTO ANY EXISTING UTILITY SERVICE. IT IS THE RESPONSIBILITY OF THE CONTRACTOR TO COORDINATE WITH THE RESPECTIVE UTILITY COMPANY AND MARK ALL LOCATIONS OF UNDERGROUND UTILITIES IN THE FIELD PRIOR TO COMMENCEMENT OF WORK. REMOVAL OF ANY EXISTING STRUCTURES SHALL BE IN CONFORMANCE WITH THE REGULATIONS OF ALL APPROPRIATE AGENCIES AND UTILITY COMPANIES.
6. ALL PORTIONS OF PAVEMENT TO BE REMOVED, REPLACED OR PAVED AGAINST SHALL BE SAWCUT. NEW ASPHALT SURFACE SHALL PROVIDE A SMOOTH TRANSITION TO EXISTING PAVEMENT TO REMAIN.
7. REFER TO AREA MAP (THIS DRAWING) FOR EXISTING BUILDINGS AND STRUCTURES WITHIN 200-FEET OF SUBJECT PREMISES.

LIGHTING NOTES

1. PROPOSED LIGHTING TO BE LOW-LEVEL ILLUMINATION WITH CUT-OFF TYPE FIXTURES.
2. ALL LIGHT TO BE DIRECTED INTO THE SUBJECT PROPERTY; FIXTURES CLOSEST TO THE PROPERTY LINES TO HAVE HOUSE SIDE SHIELDS.

TRAFFIC SIGN SCHEDULE

SIGN SYMBOL	SIGN	LEGEND	NYS MUTCD NUMBER	SIZE	QUANTITY
S1 "A"	NO PARKING FIRE LANE	NO PARKING (FIRE LANE)	X	12"x18"	1
S1 "B"	NO PARKING FIRE LANE	NO PARKING (FIRE LANE)	X	12"x18"	2
S2	RESERVED PARKING FOR ACCESSIBLE 12" 90 60	RESERVED PARKING (HANDICAP SYMBOL) SIGN AT HANDICAPPED PARKING SPACE (TYP.)	R7-8	12"x18"	5
S3	NO PARKING ANY TIME	NO PARKING ANY TIME (SIGN AT STRIPED ACCESSIBLE AISLES)	X	12"x18"	3
S4	FIRE HYDRANT	FIRE HYDRANT	X	4"x24"	1

NOTES:
1) ALL SIGNS SHALL CONFORM TO FEDERAL MUTCD SPECIFICATIONS.
2) QUANTITIES SHOWN ON PLAN SHALL GOVERN OVER QUANTITIES SHOWN ON TRAFFIC SIGN SCHEDULE.
3)S1A, S1B, & S4 TO HAVE RED LETTERS ON A WHITE REFLECTIVE BACKGROUND & OTHERWISE CONFORM TO THE FIRE CODE OF NEW YORK STATE.
4) ALL HARDWARE TO BE SET FLUSH WITH SURFACE OF SIGNS.

LEGEND (PROPOSED)

- L — LANDSCAPED AREA (SEE SEPARATE LANDSCAPE PLAN BY OTHERS)
- A — ASPHALT PAVEMENT
- CX — CONCRETE CURB
- C — CONCRETE PAVING
- MC — MOUNTABLE CURB
- FC — FLUSH CURB
- SE — STEEL EDGING
- PR 1 — TYPICAL PEDESTRIAN RAMP
- PR 2 — PEDESTRIAN RAMP WITHOUT FLARED SIDES
- PP 1 — PERVIOUS PAVERS – GRASSPAVE 2
- PP 2 — PERVIOUS PAVERS – HASTINGS CHECKERBLOCK
- DP — DECORATIVE PAVERS
- RETAINING WALL
- TRAFFIC SIGN
- LIGHTING – POLE MOUNTED
- LIGHTING – BOLLARD
- EXISTING DECIDUOUS TREE TO BE REMOVED
- EXISTING EVERGREEN TREE TO BE REMOVED
- c/o LP 2 ST GT — SANITARY SYSTEM
- DRYWELL – STEEL COVER TO GRADE
- DRYWELL – CONCRETE COVER BELOW GRADE
- MH-1 — DRAINAGE MANHOLE
- ES-3 — DRAINAGE PIPE END SECTION
- TG — TRENCH GRATE
- PROPOSED CATCH BASIN

LEGEND (EXISTING)

- DECIDUOUS TREE TO REMAIN
- EVERGREEN TREE TO REMAIN
- DRAINAGE MANHOLE
- UTILITY POLE
- OVERHEAD WIRE
- HYDRANT
- SIGN

TREE LEGEND

DE	DECIDUOUS TREES
MA	MAPLE
OA	OAK
LO	LOCUST
BI	BIRCH
CH	CHERRY
BE	BEECH
CO	CONIFERS
CE	CEDAR
PI	PINE
SP	SPRUCE

GRAPHIC SCALE
30 0 15 30 60 120
(IN FEET)

THIS DRAWING IS NOT TO BE USED FOR CONSTRUCTION PURPOSES. IT IS INTENDED FOR SITE PLAN APPROVAL ONLY.

NO.	DATE	REVISION DESCRIPTION	INT.
1	11/24/09	REVISED AND REISSUED FOR FEIS	MAD/LMS
2	12/21/09	REVISED PER NCFM COMMENTS	JH
3	06/24/10	REVISED PER FIRE MARSHALL	MAD
4	09/16/10	REVISED AND REISSUED FOR FEIS	MAD

PLOT SCALE:

UNAUTHORIZED ALTERATION OR ADDITION TO THIS DOCUMENT IS A VIOLATION OF SECTION 7209 OF THE NEW YORK STATE EDUCATION LAW.

THESE DOCUMENTS (OR COPIES OF ANY THEREOF) PREPARED BY OR BEARING THE SEAL OF THE ENGINEER, SHALL NOT BE REUSED FOR ANY EXTENSIONS OF THE PROJECT OR ANY OTHER PROJECT WITHOUT THE WRITTEN CONSENT OF THE ENGINEER.

CAMERON ENGINEERING & ASSOCIATES, LLP
330 Seminole Boulevard, Suite 100
Woodbury, NY 11797
PH: (516) 827-4900 FX: (516) 827-4920
330 Fifth Avenue, Suite 1300
New York, NY 10001
PH: (212) 334-4400 FX: (212) 481-3274

PROJECT NAME:
JEWISH CONGREGATION OF BROOKVILLE

PROJECT LOCATION:
INCORPORATED VILLAGE OF MUTTONTOWN
NASSAU COUNTY, NEW YORK

TITLE:
SITE PLAN

DISCIPLINE:
CIVIL

PROJECT ENGINEER: JG	PROJECT NO. CE1064A
DESIGNED BY: MAD	JOB NO. CE1064L
DRAWN BY: MAD	DATE: OCT. 2007
CHECKED BY: JRA	SCALE: 1"=30'

DRAWING NO. 3

SHEET 3 OF 8

O:\CE1064L\Jewish\Site Plan\02 Site Plan.dwg, Layout1, jh 9/16/2010 11:05:13 AM, KProgiß

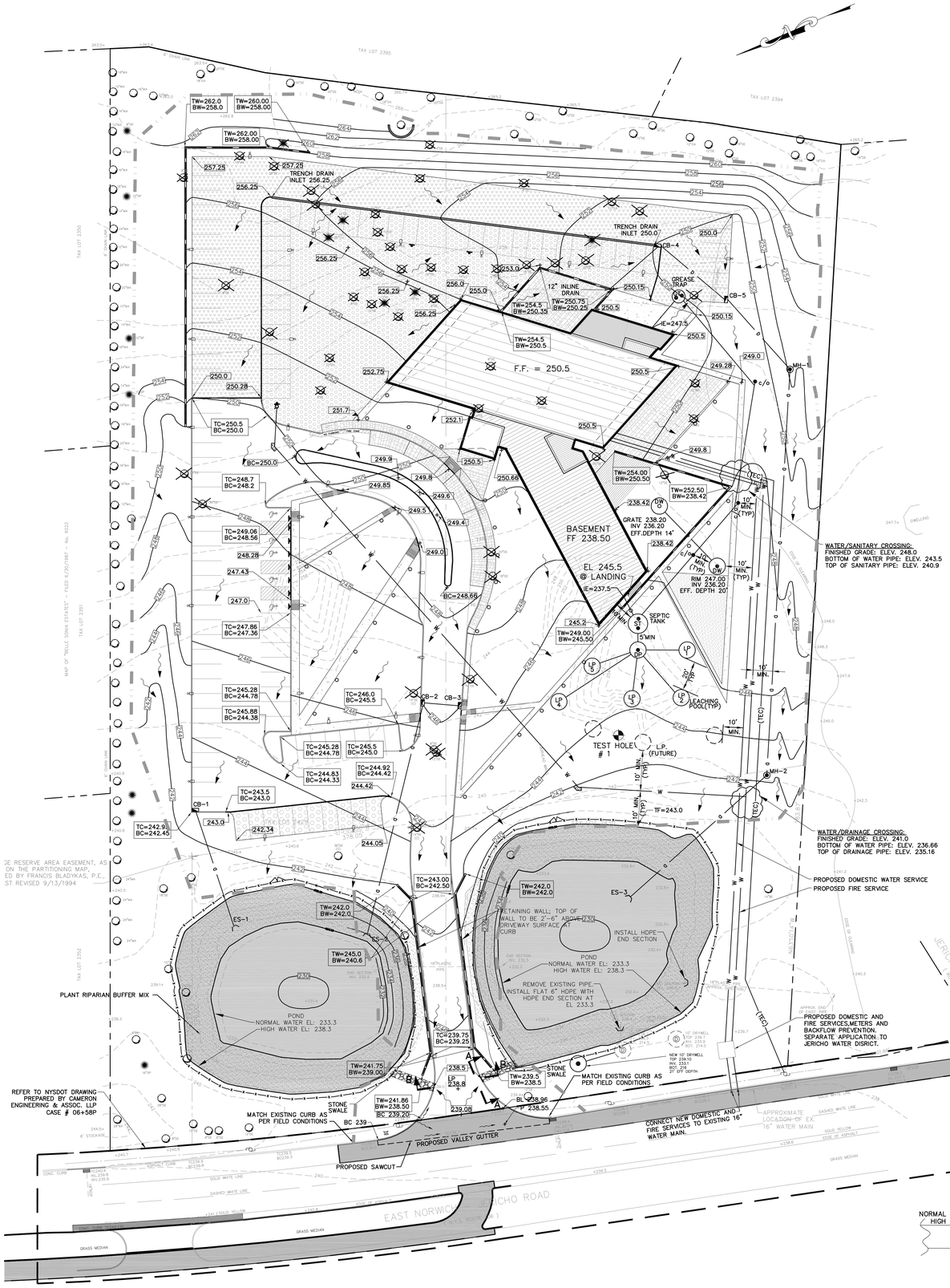

Riparian Buffer Mix ERNMX-178

%	Botanical Name	Common Name
7.00%	*Panicum virgatum*	Switch Grass, Shelter
6.00%	*Elymus riparius*	Riverbank Wild Rye
6.00%	*Elymus virginicus*	Virginia Wild Rye
6.00%	*Setaria italica*	German Foxtail Millet
5.00%	*Andropogon gerardii*	Big Bluestem, Niagara
5.00%	*Andropogon scoparius*	Little Bluestem
5.00%	*Lolium multiflorum*	Annual Ryegrass
4.00%	*Cornus amomum*	Silky Dogwood
4.00%	*Rudbeckia hirta*	Black Eyed Susan
4.00%	*Sorghastrum nutans*	Indian Grass
4.00%	*Verbena hastata*	Blue Vervain
3.50%	*Heliopsis helianthoides*	Ox Eye Sunflower
3.00%	*Chamaecrista fasciculata*	Partridge Pea
3.00%	*Glyceria striata*	Fowl Mannagrass
3.00%	*Hamamelis virginiana*	Witch Hazel
3.00%	*Rhus typhina*	Staghorn Sumac
3.00%	*Vernonia gigantea*	Giant Ironweed
3.00%	*Viburnum dentatum*	Arrow Wood
2.50%	*Helenium autumnale*	Common Sneezeweed
2.00%	*Asclepias syriaca*	Common Milkweed
2.00%	*Carex vulpinoidea*	Fox Sedge
2.00%	*Desmodium canadense*	Showy Tick Trefoil
2.00%	*Eupatorium fistulosum*	Joe Pye Weed
2.00%	*Juncus effusus*	Soft Rush
2.00%	*Penstemon digitalis*	Tall White Beard Tongue
2.00%	*Sambucus canadensis*	Elderberry
1.50%	*Eupatorium perfoliatum*	Boneset
1.00%	*Asclepias incarnata*	Swamp Milkweed
1.00%	*Aster prenanthoides*	Zigzag Aster
1.00%	*Baptisia australis*	Blue False Indigo
1.00%	*Monarda fistulosa*	Wild Bergamot
0.50%	*Euthamia graminifolia*	Grass Leaved Goldenrod

Seeding Rate: 15 lb per acre, or 1/3-1/2 lb per 1,000 sq ft

GRADING AND DRAINAGE NOTES

1. ELEVATIONS SHOWN REFER TO THE NASSAU COUNTY DATUM. THE SITE IS WITHIN THE NASSAU COUNTY TAX MAP: SEC 15, BLOCK A, LOTS 2429 AND 2430.
2. MINIMUM LOT GRADING TO BE 1% CREATE SMOOTH TRANSITIONS FROM PROPOSED GRADED AREAS TO EXISTING TERRAIN.
3. DRAINAGE DESIGN IS BASED ON 8" VOLUMETRIC STORAGE.
4. ALL ROOF DRAINAGE PIPES TO BE 6" DIAM. HDPE AT A MIN. 1% SLOPE (UNLESS OTHERWISE NOTED ON THE PLAN). ALL PIPES CONNECTING INLETS AND DRYWELLS ON LOT TO BE 15" DIAM. HDPE AT MIN. 1% SLOPE.
5. COMPACTION OF BACKFILL AROUND INLETS, BASINS, MANHOLES, DRYWELLS, SIMILAR STRUCTURES, AND IN ALL PIPE TRENCH AREAS WILL BE REQUIRED. THE METHOD AND TYPE OF EQUIPMENT USED MUST BE APPROVED BY THE VILLAGE BUILDING DEPARTMENT BEFORE CONSTRUCTION.
6. THE CONTRACTOR SHALL USE THE APPROPRIATE MEANS TO PREVENT SEDIMENT AND DEBRIS FROM WASHING TO ADJACENT AREAS.
7. ALL DISTURBED AREAS TO BE TOPSOILED, FINE GRADED AND SEEDED.

POND NOTES

1. PROPOSED POND'S SHALL HAVE A 45 MIL. HPDM RUBBER POND LINER WITH POLYETHYLENE FABRIC UNDERLAYMENT.
2. PROPOSED POND'S SUBGRADE SHALL BE COMPACTED TO A 95% PROCTOR OPTIMUM VALUE WITH NO LARGE LOOSE STONE AND DEBRIS.
3. PROPOSED POND'S SHALL HAVE SUBMERGED AERATOR'S. PUMP / CONTROL UNIT'S SHALL BE PROVIDED AT EACH POND

LEGEND

- PROPOSED DRYWELL WITH GRATE
- PROPOSED DRYWELL WITH SOLID CAST IRON COVER AT GRADE
- MH-1 PROPOSED DRAINAGE MANHOLE
- TRENCH GRATE
- PROPOSED CATCH BASIN
- ES-3 DRAINAGE PIPE END SECTION
- IE SANITARY INVERT ELEVATION
- 100.0 PROPOSED SPOT ELEVATION
- TW 100.00 BW 99.50 PROPOSED TOP/BOTTOM OF WALL ELEVATION
- 100 PROPOSED CONTOUR
- D PROPOSED STORM DRAINAGE PIPE
- CONCRETE THRUST BLOCK
- W PROPOSED WATER SERVICE
- SAN PROPOSED SANITARY PIPING
- TEC PROPOSED TELEPHONE-ELECTRC CABLE SERVCE
- LIGHTING - POLE MOUNTED
- LIGHTING - BOLLARD
- SD SANITARY DISTRIBUTION POOL SOLID CAST IRON COVER AT GRADE
- LP SANITARY LEACHING POOL W/ CONCRETE COVER BELOW GRADE
- FUTURE EXPANSON SANITARY LEACHING POOL
- c/o SANITARY LEACHING POOL FUTURE EXPANSION
- GP PROPOSED SANITARY GREASE TRAP
- ST PROPOSED SANITARY SEPTIC TANK
- APPROXIMATE LIMIT OF DISTURBANCE LINE

LEGEND (EXISTING)

- DECIDUOUS TREE TO REMAIN
- EVERGREEN TREE TO REMAIN
- DRAINAGE MANHOLE
- UTILITY POLE
- OVERHEAD WIRE
- HYDRANT
- SIGN
- TC EXISTING TOP OF CURB
- BC EXISTING BOTTOM OF CURB
- +260.1 EXISTING SPOT ELEVATION
- EXISTING CONTOUR

WATER SUPPLY NOTES:

1. DISTANCE TO PUBLIC WATER SUPPLY IS APPROXIMATELY 12' (FRONT PROPERTY LINE TO EXISTING 16" WATER MAIN IN N.Y.S. RT. 106)
2. SUBJECT PROPERTY IS SERVICED BY THE WATER MAIN DISTRIBUTION SYSTEM UNDER OWNERSHIP OF JERICHO WATER DISTRICT.
3. PROPOSED DOMESTIC AND FIRE SERVICES SHALL BE INSTALLED IN ACCORDANCE WITH THE JERICHO WATER DISTRICT, INCLUDING METERING AND BACKFLOW IMPROVEMENTS.
4. WATER SERVICES SHOWN ARE PRELIMINARY ONLY; FINAL DESIGN AND DETAILS ARE SUBJECT TO COMPLIANCE WITH THE JERICHO WATER DISTRICT AND NASSAU COUNTY DEPARTMENT OF HEALTH.

SANITARY DISPOSAL NOTES:

1. THE PROPOSED SANITARY SYSTEM LEACHING POOLS AND SEPTIC TANK SHOWN ARE APPROXIMATE ONLY AND ARE SUBJECT TO APPROVAL BY NASSAU COUNTY HEALTH DEPARTMENT (NCHD) REQUIREMENTS.
2. SANITARY SEPTIC SYSTEM CONNECTION PIPE SHALL BE 6" DIAM. PVC SDR-18 AT MIN. 1 % TYP. SLOPE, UNLESS OTHERWISE NOTED. A NASSAU COUNTY STANDARD CLEANOUT SHALL BE INSTALLED AS DIRECTED WHEN LENGTH OF SANITARY SERVICE CONNECTION EXCEEDS 75' AND AT BENDS EXCEEDING 23 DEGREES.
3. THE MINIMUM HORIZONTAL CLEARANCE BETWEEN THE SANITARY SEWER AND WATER SERVICES SHALL BE 10'. THE MINIMUM VERTICAL CLEARANCE BETWEEN THE SANITARY SEWER AND WATER SERVICE LINES IS TO BE 18".
4. CRANE DUG TEST HOLE WAS PERFORMED ON JULY 30, 2007 AND WAS WTNESSED BY REPRESENTATON OF:
   1. SIDNEY B. BOWNE & SON, LLP
   2. NASSAU COUNTY HEALTH DEPARTMENT
   3. CAMERON ENGNEERING & ASSOCIATES, LLP

DRAINAGE CALCULATIONS

REQUIRED STORAGE

TOTAL SITE AREA= 266,580 SF. (6.11 AC.)

-ROOF AREA	14,845 SF. x 1.00 x 8/12 =	9,897 CF.
-TERRACE AREAS AND PLAYGROUND	4,989 SF. x 1.00 x 8/12 =	3,326 CF.
-PAVEMENT AREA	62,283 SF. x 1.00 x 8/12 =	41,522 CF.
-MANAGED LANDSCAPE & NATURAL LANDSCAPE AREAS	180,989 SF. x 0.30 x 8/12 =	36,198 CF.
	SUB-TOTAL=	90,943 CF.
-OFF-SITE AREA	92,678 SF. x 0.45 x 8/12 =	27,804 CF.
-TOTAL STORMWATER STORAGE REQUIRED (BASED ON 8-INCHES)		118,607 CF.

STORAGE PROVIDED

-RETENTION POND STORAGE PROVIDED: 119,394 CF.

DRAINAGE CALCULATIONS FOR SUNKEN PATIO

-TOTAL AREA OF PATIO 3,473 SF. x 1.00 x 8/12 = 2,315 CF.
STORAGE REQUIRED 2,298 CF

STORAGE PROVIDED 2,326 CF (2 WELLS 10'ø 20' + 14' EFFECTIVE DEPTH)

DRAINAGE STRUCTURE SCHEDULE

STR #	STRUCTURE TYPE	TOP OF CASTING	PIPE INVERTS & SIZE
CB-1	NC-TYPE A	242.45	238.95 (15" OUT)
CB-2	NC-TYPE A	246.0	242.0 (15" IN) 242.0 (15" OUT)
CB-3	NC-TYPE A	246.0	242.5 (15" OUT)
CB-4	NC-TYPE A	250.0	246.76 (15" IN) 246.76 (15" OUT)
CB-5	NC-TYPE A	249.5	245.7 (15" IN) 245.7 (15" OUT)
ES-1	15" END SECTION	-	234.0
ES-2	15" END SECTION	-	234.0
ES-3	15" END SECTION		232.18
MH-1	MANHOLE	252.0	244.56 (15" IN) 244.56 (15" OUT)
MH-2	MANHOLE	242.25	239.6 (15" IN) 233.34 (15" OUT)

TEST HOLE #1
JULY 30, 2007

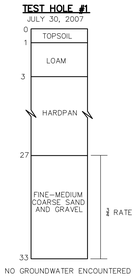

NO GROUNDWATER ENCOUNTERED

LIGHTING SCHEDULE

MARK	DESCRIPTION	HEIGHT	WATTAGE	MANUFACTURER	QUANTITY
o	BOLLARD	43 3/8"	39 W MH	BEGA # 8533 MH	36
	POLE - MOUNTED	16'	150 W MH	BEGA # 8145 MH	32

SECTION A-A
SCALE: N.T.S.

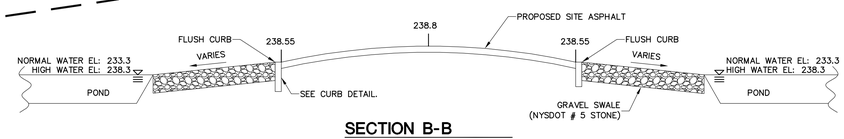

SECTION B-B
SCALE: N.T.S.

GRAPHIC SCALE
30 0 15 30 60 120
(IN FEET)

THIS DRAWING IS NOT TO BE USED FOR CONSTRUCTION PURPOSES. IT IS INTENDED FOR SITE PLAN APPROVAL ONLY.

NO.	DATE	REVISION DESCRIPTION	INT.
1	10/08/08	REVISED AND REISSUED FOR FEIS/DOT COMMENTS	MAD/JB/MS
2	12/21/09	REVISED PER NCFM COMMENTS	JH
3	06/24/10	REVISED PER FIRE MARSHALL	MAD
4	09/16/10	REVISED AND REISSUED FOR FEIS	MAD

PLOT SCALE:

UNAUTHORIZED ALTERATION OR ADDITION TO THIS DOCUMENT IS A VIOLATION OF SECTION 7209 OF THE NEW YORK STATE EDUCATION LAW.

THESE DOCUMENTS (OR COPIES OF ANY THEREOF) PREPARED BY OR BEARING THE SEAL OF THE ENGINEER, SHALL NOT BE REUSED FOR ANY EXTENSIONS OF THE PROJECT OR ANY OTHER PROJECT WITHOUT THE WRITTEN CONSENT OF THE ENGINEER.

CAMERON ENGINEERING & ASSOCIATES, LLP
330 Sunnyside Boulevard, Suite 100
Woodbury, NY 11797
PH: (516) 827-4900 FX: (516) 827-4920
330 Fifth Avenue, Suite 1300
New York, NY 10001
PH: (212) 326-4000 FX: (212) 481-5274

PROJECT NAME:
JEWISH CONGREGATION OF BROOKVILLE

PROJECT LOCATION:
INCORPORATED VILLAGE OF MUTTONTOWN
NASSAU COUNTY, NEW YORK

TITLE:
GRADING DRAINAGE AND UTILITY PLAN

DISCIPLINE:
CIVIL

PROJECT ENGINEER:	PROJECT NO.	DRAWING NO.
JG	CE1064A	4
DESIGNED BY: MAD	JOB NO. CE1064L	SHEET 4 OF 8
DRAWN BY: MAD	DATE: OCT. 2007	
CHECKED BY: JRA	SCALE: 1"=30'	

PERMANENT SLOPE STABILIZATION NOTE

1. ALL PROPOSED SLOPES WITH A GRADE OF 3:1 OR STEEPER SHALL BE STABILIZED WITH STRAW FIBER BLANKETS. THE BLANKETS SHALL BE SC150 MANUFACTURED BY NORTH AMERICAN GREEN, OR EQUAL. INSTALLATION OF THE BLANKETS SHALL BE PER MANUFACTURER'S RECOMMENDATION.

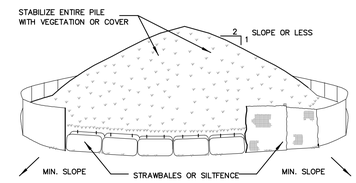

INSTALLATION NOTES

1. AREA CHOSEN FOR STOCKPILING OPERATIONS SHALL BE DRY AND STABLE.
2. MAXIMUM SLOPE OF STOCKPILE SHALL BE 1:2.
3. UPON COMPLETION OF SOIL STOCKPILING, EACH PILE SHALL BE SURROUNDED WITH EITHER SILT FENCING OR STRAWBALES, THEN STABILIZED WITH VEGETATION OR COVERED.
4. SEE DETAIL FOR INSTALLATION OF SILTFENCE.

SOIL STOCKPILING

SCALE: NTS

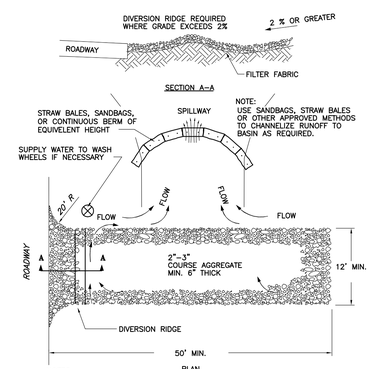

NOTES:
1. THE ENTRANCE SHALL BE MAINTAINED IN A CONDITION THAT WILL PREVENT TRACKING OR FLOWING OF SEDIMENT ONTO PUBLIC RIGHT-OF-WAYS. THIS MAY REQUIRE TOP DRESSING, REPAIR AND/OR CLEANOUT OF ANY MEASURES USED TO TRAP SEDIMENT.
2. WHEN NECESSARY, WHEELS SHALL BE CLEANED PRIOR TO ENTRANCE ONTO PUBLIC RIGHT-OF-WAY.
3. WHEN WASHING IS REQUIRED, IT SHALL BE DONE ON AN AREA STABILIZED WITH CRUSHED STONE THAT DRAINS INTO AN APPROVED SEDIMENT TRAP OR SEDIMENT BASIN.

CONSTRUCTION ENTRANCE

SCALE: N.T.S.

EROSION CONTROL NOTES

1. THE PROPOSED EROSION CONTROL MEASURES SHALL BE INSTALLED PRIOR TO THE START OF CONSTRUCTION. ADDITIONAL EROSION CONTROL MAY BE NECESSARY, BASED UPON FIELD CONDITIONS THAT MAY DEVELOP AS CONSTRUCTION PROGRESSES AND AS MAY BE REQUIRED BY THE INCORPORATED VILLAGE OF MUTTONTOWN. THE FOLLOWING GENERAL CONDITIONS SHALL BE OBSERVED.
   - A. EXISTING VEGETATION TO REMAIN SHALL BE PROTECTED AND REMAIN UNDISTURBED.
   - B. CLEARING AND GRADING SHALL BE SCHEDULED SO AS TO MINIMIZE THE SIZE OF EXPOSED AREAS AND THE LENGTH OF TIME THAT AREAS ARE EXPOSED.
   - C. THE LENGTH AND STEEPNESS OF CLEARED SLOPES SHALL BE MINIMIZED TO REDUCE RUNOFF VELOCITIES AND QUANTITIES.
   - D. RUNOFF SHALL BE DIVERTED AWAY FROM CLEARED SLOPES.
   - E. SEDIMENT SHALL BE TRAPPED ON THE SITE.
   - F. SPECIFIC METHODS AND MATERIALS EMPLOYED IN THE INSTALLATION AND MAINTENANCE OF EROSION CONTROL MEASURES SHALL CONFORM TO THE "NEW YORK GUIDELINES FOR URBAN EROSION AND SEDIMENT CONTROL".
2. SEDIMENT BARRIERS (SILT FENCE, HAY BALES OR APPROVED EQUAL) SHALL BE INSTALLED PRIOR TO ANY GRADING WORK ALONG THE LIMITS OF DISTURBANCES AND SHALL BE MAINTAINED FOR THE DURATION OF THE WORK. NO SEDIMENT FROM THE SITE SHALL BE PERMITTED TO WASH ONTO ADJACENT PROPERTIES, WETLANDS OR ROADS.
3. GRADED AND STRIPPED AREAS AND STOCKPILES SHALL BE KEPT STABILIZED THROUGH THE USE OF TEMPORARY SEEDING AS REQUIRED. SEED MIXTURES SHALL BE IN ACCORDANCE WITH SOIL CONSERVATION SERVICE RECOMMENDATIONS.
4. DRAINAGE INLETS INSTALLED AS PART OF THE PROJECT SHALL BE PROTECTED FROM SEDIMENT BUILDUP THROUGH THE USE OF SEDIMENT BARRIERS, SEDIMENT TRAPS, ETC., AS REQUIRED.
5. PROPER MAINTENANCE OF EROSION CONTROL MEASURES IS TO BE PERFORMED AS INDICATED BY PERIODIC INSPECTION AND AFTER HEAVY OR PROLONGED STORMS. MAINTENANCE MEASURES INCLUDE, BUT ARE NOT LIMITED TO, CLEANING OF SEDIMENT BASINS OR TRAPS, CLEANING OR REPAIR OF SEDIMENT BARRIERS, CLEANING AND REPAIR OF BERMS AND DIVERSIONS AND CLEANING AND REPAIR OF INLET PROTECTION.
6. APPROPRIATE MEANS SHALL BE USED TO CONTROL DUST DURING CONSTRUCTION.
7. A STABILIZED CONSTRUCTION ENTRANCE SHALL BE MAINTAINED TO PREVENT SOIL AND LOOSE DEBRIS FROM BEING TRACKED ONTO LOCAL ROADS. THE CONSTRUCTION ENTRANCE SHALL BE MAINTAINED UNTIL THE SITE IS PERMANENTLY STABILIZED.
8. SEDIMENT BARRIERS AND OTHER EROSION CONTROL MEASURES SHALL REMAIN IN PLACE UNTIL UPLAND DISTURBED AREAS ARE PERMANENTLY STABILIZED (SEE GRADING NOTE NUMBER 1). AFTER PERMANENT STABILIZATION, PAVED AREAS SHALL BE CLEANED AND DRAINAGE SYSTEMS CLEANED AND FLUSHED AS NECESSARY.
9. ALL 1:2 & 1:3 SLOPE AREAS WILL BE PROTECTED AGAINST EROSION DURING CONSTRUCTION AND PERMANENT GROUND COVER SHALL BE SUCH THAT EROSION WILL BE PREVENTED. NECESSARY MEASURES SHALL INCLUDE, BUT NOT BE LIMITED TO, HAY BALES, SILT FENCE, SILT TRAPS/BASINS, JUTE MESH, HYDROSEEDING, ETC. AND SHALL BE MAINTAINED FOR THE DURATION OF CONSTRUCTION AS WELL AS FOLLOWING THE COMPLETION OF CONSTRUCTION UNTIL SUCH TIME THAT THE PROPOSED PLANTINGS HAVE BECOME ACCLIMATED/ESTABLISHED AS DETERMINED BY THE VILLAGE OF LAKE SUCCESS.

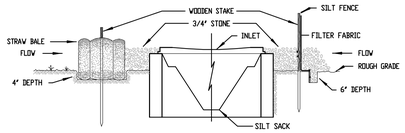

INSTALLATION NOTES

SILT FENCE

1. EXCAVATE A 6 INCH x 6 INCH TRENCH, OFFSET APPROXIMATELY 2 FEET FROM THE INLET PERIMETER.
2. UNROLL A SECTION AT A TIME AND POSITIONTHE POSTS AGAINST THE BACK (DOWNSTREAM) WALL OF THE TRENCH (NET SIDE AWAY FROM DIRECTION OF FLOW).
3. DRIVE THE POST INTO THE GROUND UNTIL THE NETTING IS APPROXIMATELY 2 INCHES FROM THE TRENCH BOTTOM.
4. LAY THE TOE-IN FLAP OF FABRIC ONTO THE UNDISTURBED BOTTOM OF THE TRENCH, BACKFILL THE TRENCH AND TAMP THE SOIL. STEEPER SLOPES REQUIRE AN INTERCEPT TRENCH.
5. JOIN SECTIONS AS SHOWN ABOVE. SUPPLEMENT WITH GRAVEL, PILED AGAINST THE FENCE.

STRAW BALES

1. PLACE BALES OF STRAW WITH ENDS TIGHTLY ABUTTING OTHER BALES TO SURROUND THE INLET. WHERE SLOPE AND SPACE PERMIT, ESTABLISH THE LINE OF BALES 2 TO 10 FEET AWAY FROM THE INLET. ANCHOR BALES IN PLACE BY DRIVING REBARS OR 2" x 2" STAKES THROUGH THE BALES. SUPPLEMENT WITH GRAVEL, PILED AGAINST THE BALES.
2. SEDIMENT SHALL BE REMOVED AND THE TRAP RESTORED TO ITS ORIGINAL DIMENSIONS WHEN THE SEDIMENT HAS ACCUMULATED TO 1/2 THE DESIGN DEPTH OF THE TRAP. REMOVED SEDIMENT SHALL BE DEPOSITED IN A SUITABLE AREA AND IN SUCH A MANNER THAT IT WILL NOT ERODE.
3. THE STRUCTURE SHALL BE INSPECTED AFTER EACH RAIN AND REPAIRS MADE AS NEEDED.
4. CONSTRUCTION OPERATIONS SHALL BE CARRIED OUT IN SUCH A MANNER THAT EROSION AND WATER POLLUTION SHALL BE MINIMIZED.
5. THE SEDIMENT TRAP SHALL BE REMOVED AND THE AREA STABILIZED WHEN THE REMAINING DRAINAGE AREA HAS BEEN PROPERLY STABILIZED.

INLET PROTECTION

SCALE: NTS

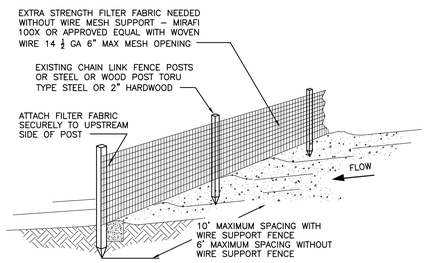

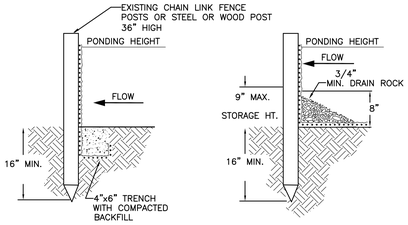

TRENCH DETAIL — INSTALLATION WITHOUT TRENCHING

NOTES:
1. SILT FENCE SHALL BE PLACED ON SLOPE CONTOURS TO MAXIMIZE PONDING EFFICIENCY.
2. INSPECT AND REPAIR FENCE AFTER EACH STORM EVENT AND REMOVE SEDIMENT WHEN NECESSARY. 9" MAXIMUM RECOMMENDED STORAGE HEIGHT.
3. REMOVED SEDIMENT SHALL BE DEPOSITED TO AN AREA THAT WILL NOT CONTRIBUTE SEDIMENT OFF-SITE AND CAN BE PERMANENTLY STABILIZED.
4. WHERE POSSIBLE ATTACH SILT FENCE TO EXISTING CHAIN LINK FENCE.

SILT FENCE DETAIL

SCALE: NTS

EROSION CONTROL MEASURES

SILT FENCE
INLET PROTECTION
HAY BALE

GRAPHIC SCALE

30 0 15 30 60 120

(IN FEET)

THIS DRAWING IS NOT TO BE USED FOR CONSTRUCTION PURPOSES. IT IS INTENDED FOR SITE PLAN APPROVAL ONLY.

NO.	DATE	REVISION DESCRIPTION	INT.
1	11/24/09	REVISED AND REISSUED FOR FEIS	MAD/LMB
2	12/21/09	REVISED PER NCFM COMMENTS	JH
3	08/24/10	REVISED PER FIRE MARSHALL	MAD
4	09/16/10	REVISED AND REISSUED FOR FEIS	MAD

PLOT SCALE:

UNAUTHORIZED ALTERATION OR ADDITION TO THIS DOCUMENT IS A VIOLATION OF SECTION 7209 OF THE NEW YORK STATE EDUCATION LAW.

THESE DOCUMENTS (OR COPIES OF ANY THEREOF) PREPARED BY OR BEARING THE SEAL OF THE ENGINEER, SHALL NOT BE REUSED FOR ANY EXTENSIONS OF THE PROJECT OR ANY OTHER PROJECT WITHOUT THE WRITTEN CONSENT OF THE ENGINEER.

CAMERON ENGINEERING & ASSOCIATES, LLP
100 Sunnyside Boulevard, Suite 100 Woodbury, NY 11797 P/F: (516) 827-4900 F/F: (516) 827-4920
330 Fifth Avenue, Suite 1300 New York, NY 10001 P/F: (212) 324-4000 F/F: (212) 481-3274

PROJECT NAME:
JEWISH CONGREGATION OF BROOKVILLE

PROJECT LOCATION:
INCORPORATED VILLAGE OF MUTTONTOWN
NASSAU COUNTY, NEW YORK

TITLE:
SEDIMENT AND EROSION CONTROL PLAN

DISCIPLINE:
CIVIL

PROJECT ENGINEER:	PROJECT NO.	DRAWING NO.
JG	CE1064A	5
DESIGNED BY: MAD	JOB NO. CE1064L	
DRAWN BY: MAD	DATE: OCT. 2007	SHEET 5 OF 8
CHECKED BY: JRA	SCALE: 1"=30'	

O:\CE1064L\design\Site Plan\Grd Erosion Control Plan.dwg, Layout 1, 9/16/2010 11:12:26 AM, MDugdale

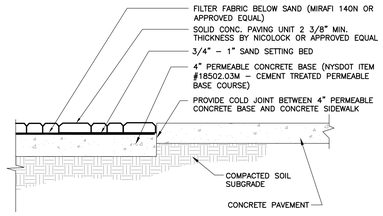

PAVER DETAIL

SCALE: NTS

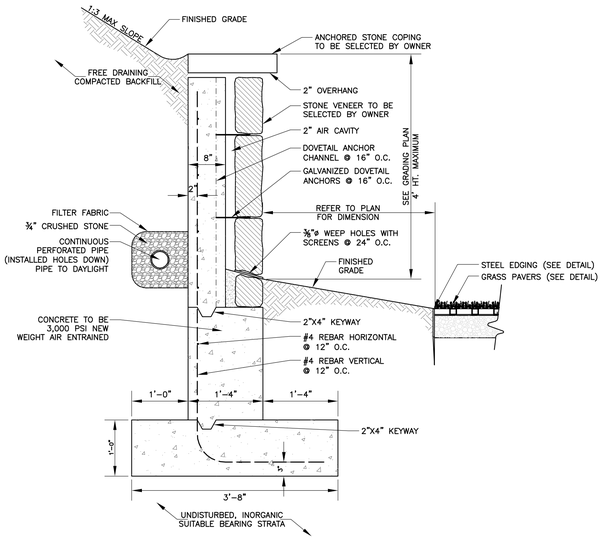

STONE FACED RETAINING WALL DETAIL

SCALE: NTS

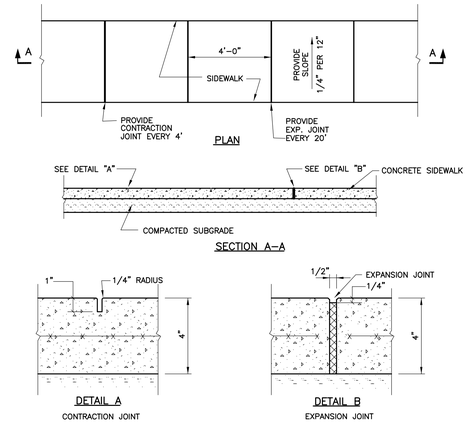

TYPICAL CONCRETE SIDEWALK

SCALE: NTS

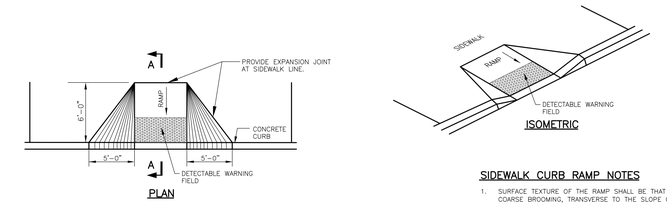

SIDEWALK CURB RAMP NOTES

1. SURFACE TEXTURE OF THE RAMP SHALL BE THAT OBTAINED BY COARSE BROOMING, TRANSVERSE TO THE SLOPE OF THE RAMP.
2. THE NORMAL PAVEMENT EDGE PROFILE SHALL BE MAINTAINED THROUGH THE AREA OF THE RAMP.
3. ALL RAMPS SHALL MEET ANSI/A.D.A. REQUIREMENTS.

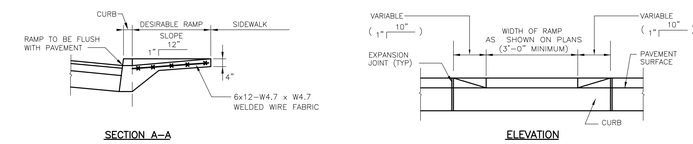

TYPICAL PEDESTRIAN RAMP

SCALE: N.T.S.

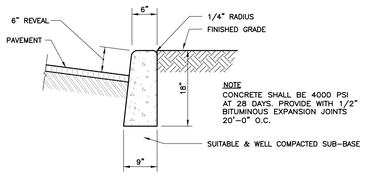

NOTE
CONCRETE SHALL BE 4000 PSI AT 28 DAYS. PROVIDE WITH 1/2" BITUMINOUS EXPANSION JOINTS 20'–0" O.C.

CONCRETE CURB DETAIL

SCALE: NTS

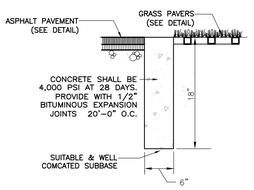

FLUSH CONCRETE CURB

SCALE: NTS

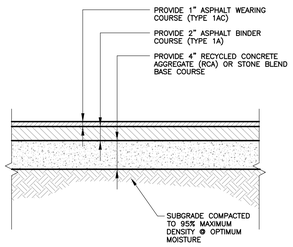

SITE ASPHALT PAVEMENT

SCALE: NTS

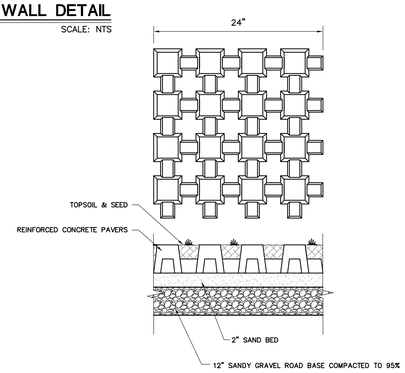

NOTE:
PAVERS TO BE "CHECKER BLOCK" AS MANUFACTURED BY HASTINGS, OR EQUAL AND DISTRIBUTED BY NICOLOCK PAVERS

HASTINGS CHECKERBLOCK GRASS PAVER DETAIL

SCALE: NTS

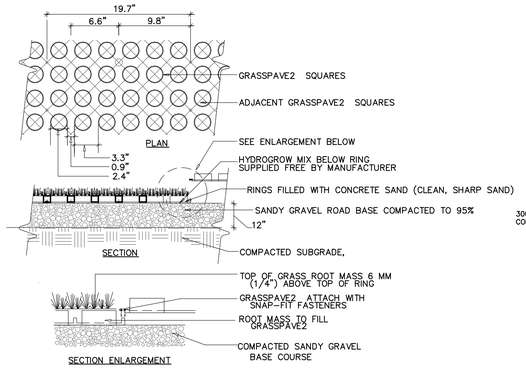

GRASSPAVE2 GRASS PAVER DETAIL

SCALE: NTS

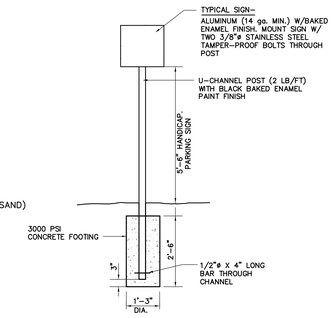

SIGN POST

SCALE: NTS

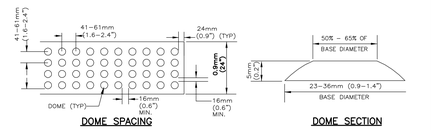

DOME SPACING

DOME SECTION

GENERAL NOTES:

THE DETAILS PROVIDED ARE NOT TO SCALE. THE QUANTITY OF DOMES DEPICTED ON THE DETECTABLE WARNING FIELD (THE DOMES AND THE ENTIRE 610 mm [24 IN] LEVEL SURFACE) IS FOR ILLUSTRATION ONLY. THE SIZE OF THE DETECTABLE WARNING FIELD SHALL BE 610 mm (24 IN.) IN THE DIRECTION OF TRAVEL AND SHALL EXTEND THE FULL WIDTH OF THE CURB RAMP, EXCLUSIVE OF SIDE FLARES.

DETECTABLE WARNINGS SHALL BE LOCATED SO THAT THE EDGE OF THE WARNING NEAREST TO THE ROADWAY IS 150 mm (5.9 IN.) TO 225 mm (8.9 IN.) FROM THE EDGE OF THE ROADWAY OR FROM THE FACE OF THE DROPPED CURB.

DOMES SHALL BE ALIGNED ON A SQUARE GRID IN THE PREDOMINANT DIRECTION OF TRAVEL.

THE DETECTABLE WARNING FIELD SHALL BE WHITE.

DETECTABLE WARNING FIELD

SCALE: N.T.S.

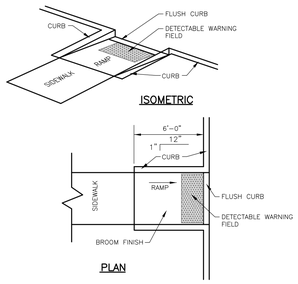

PEDESTRIAN RAMP WITHOUT FLARED SIDES

SCALE: N.T.S.

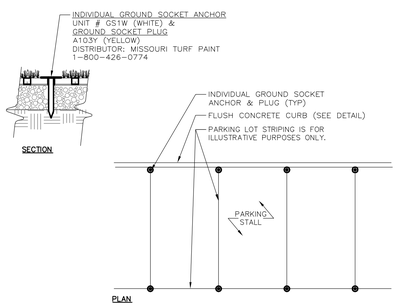

PARKING STALL MARKERS WITHIN GRASS PAVERS

SCALE: NTS

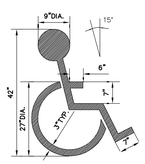

HANDICAPPED SYMBOL

SCALE: NTS

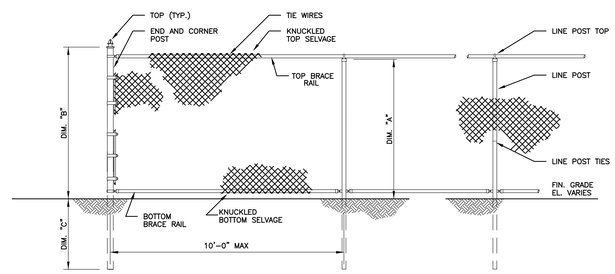

ELEVATION

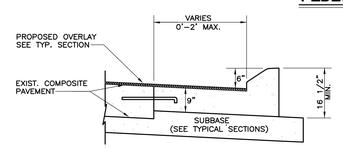

MOUNTABLE CURB DETAIL

SCALE: NTS

CHAIN LINK FENCE TABLE						
FENCE HEIGHT	DIMENSION (MIN.)			LINE POST	TOP/BOT RAIL	END/CORN POST
	A	B	C			
4'–0"	4'–0"	4'–6"	2'–6"	2.0" O.D.	1–5/8" O.D.	2.5" O.D.

PIPE SCHEDULE			
NOMINAL O.D.	ACTUAL I.D.	ACTUAL O.D.	WEIGHT (LBS/FT)
1–5/8"	1.380	1.660	2.27
2"	1.610	1.900	2.71
2–1/2"	2.067	2.375	3.65
3"	2.469	2.875	5.79

GENERAL CHAIN LINK FENCE NOTES

1. ALL POSTS & RAILS SHALL BE SCHEDULE 40 WIEGHT COMERCIAL GRADE GALVANIZED STEEL PIPE WITH BLACK VINYL CLADDING.
2. ALL CHAINLINK SHALL BE 2" x 6 GAUGE VINYL COATED WIRE (BLACK).
3. ALL FENCES SHALL HAVE TOP AND BOTTOM RAILS.
4. CONTRACTOR TO SUBMIT MANUFACTURERS SPECIFICATIONS AND DRAWINGS, INDICATING ALL SIZES AND CONNECTIONS TO BE USED, FOR APPROVAL BY THE OWNER'S REPRESENTATIVE.

BLACK VINYL CLAD CHAIN LINK FENCE

SCALE: NTS

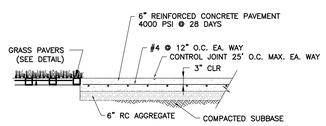

CONCRETE AT SERVICE AREA

SCALE: NTS

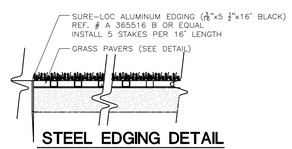

STEEL EDGING DETAIL

SCALE: NTS

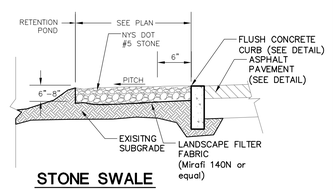

STONE SWALE

SCALE: N.T.S.

NOTE:
ALL PAVEMENT MARKINGS (EXCEPT TRAFFIC ARROWS AND STOP BARS) SHALL BE SETFAST LOW VOC TRAFFIC MARKING PAINT OR APPROVED EQUAL AS PER NYSDOT REQUIREMENTS. TRAFFIC ARROWS AND STOP BAR SHALL BE THERMOPLASTIC MATERIAL FORMULATED SPECIFICALLY FOR USE AS RETROREFLECTIVE PAVEMENT MARKINGS AS PER NYSDOT REQUIREMENTS.

TYPICAL PAVEMENT STRIPING

SCALE: NTS

THIS DRAWING IS NOT TO BE USED FOR CONSTRUCTION PURPOSES. IT IS INTENDED FOR SITE PLAN APPROVAL ONLY.

NO.	DATE	REVISION DESCRIPTION	INT.
1	11/24/09	REVISED AND REISSUED FOR FEIS	MAD/LMB
2	12/21/09	REVISED PER NCFM COMMENTS	JH
3	08/24/10	REVISED PER FIRE MARSHALL	MAD
4	09/16/10	REVISED AND REISSUED FOR FEIS	MAD

PLOT SCALE:

UNAUTHORIZED ALTERATION OR ADDITION TO THIS DOCUMENT IS A VIOLATION OF SECTION 7209 OF THE NEW YORK STATE EDUCATION LAW.

THESE DOCUMENTS (OR COPIES OF ANY THEREOF) PREPARED BY OR BEARING THE SEAL OF THE ENGINEER, SHALL NOT BE REUSED FOR ANY EXTENSIONS OF THE PROJECT OR ANY OTHER PROJECT WITHOUT THE WRITTEN CONSENT OF THE ENGINEER.

CAMERON ENGINEERING & ASSOCIATES, LLP
300 Sweetwater Bowlevard, Suite 300
Westbury, NY 11590
PH: (516) 827-4900 FX: (516) 827-4920
330 Fifth Avenue, Suite 1300
New York, NY 10001
PH: (212) 324-4000 FX: (212) 481-5274

PROJECT NAME:
JEWISH CONGREGATION OF BROOKVILLE

PROJECT LOCATION:
INCORPORATED VILLAGE OF MUTTONTOWN
NASSAU COUNTY, NEW YORK

TITLE:
SITE DETAILS 1

DISCIPLINE:
CIVIL

PROJECT ENGINEER:	PROJECT NO.	DRAWING NO.
JG	CE1064A	6
DESIGNED BY: MAD	JOB NO. CE1064L	
DRAWN BY: MAD	DATE: OCT. 2007	SHEET 6 OF 8
CHECKED BY: JRA	SCALE:	

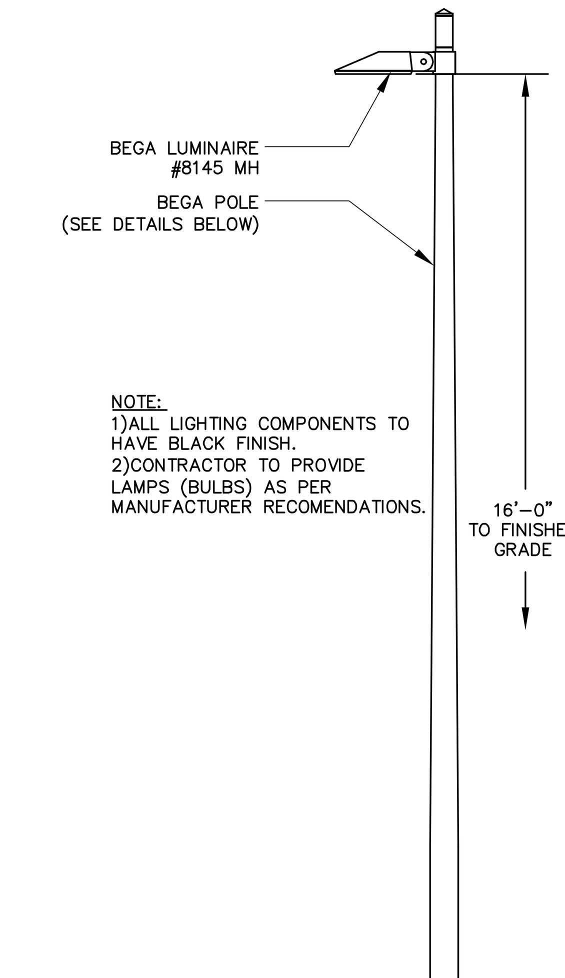

LIGHT POLE - SECTION

SCALE: NTS

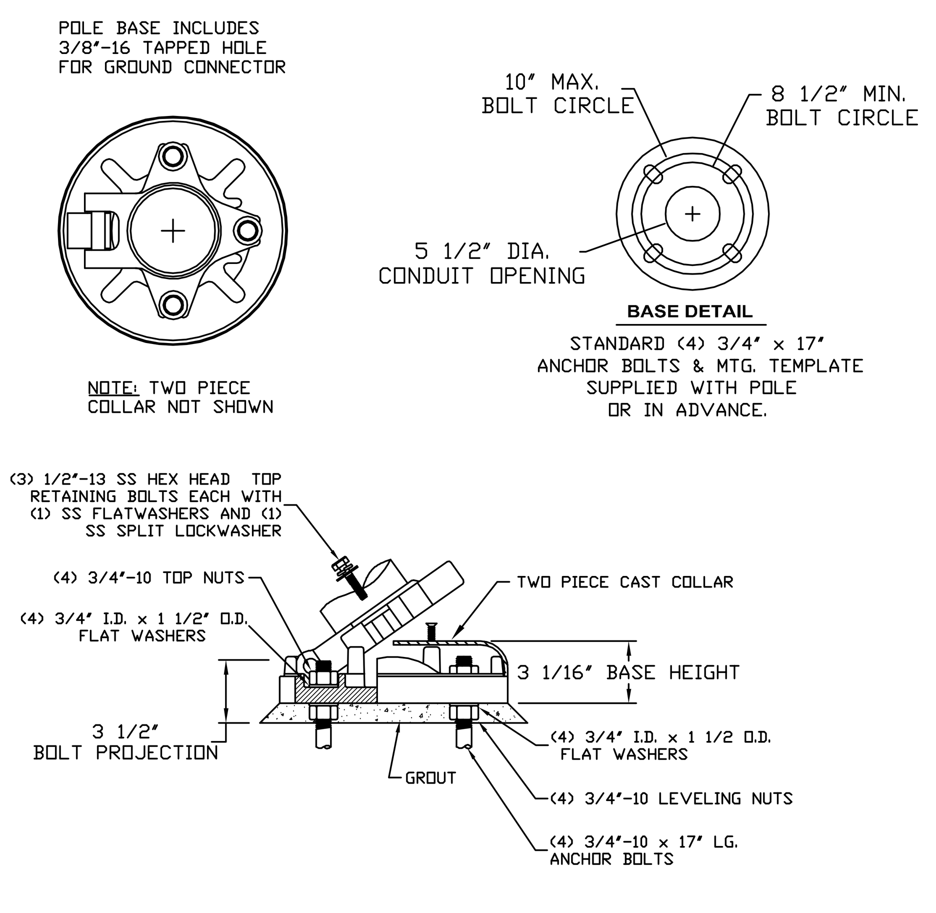

CAUTION: RAISING OR LOWERING OF THE POLE REQUIES ADEQUATE PREPERATION DO NOT UNDERESTIMATE THE FORCE REQUIRED TO RAISE OR LOWER POLES WITH HEAVY LUMINAIRES AT THE TOP.

LIGHT POLE - MOUNTING DETAILS

SCALE: NTS

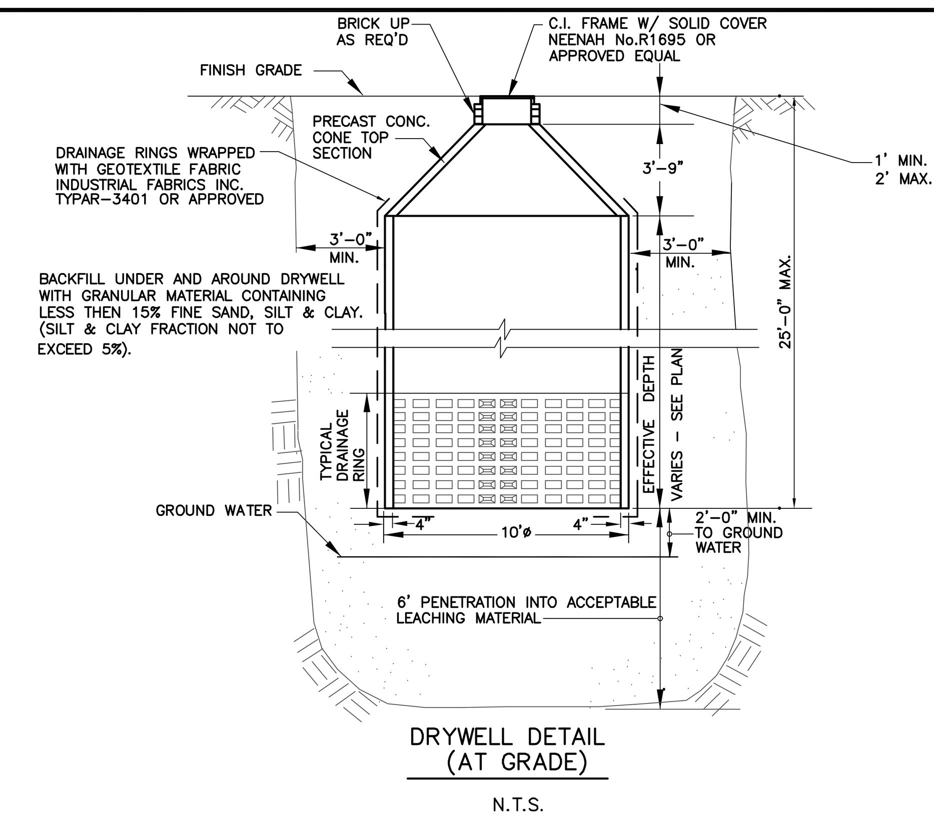

DRYWELL DETAIL

SCALE: NTS

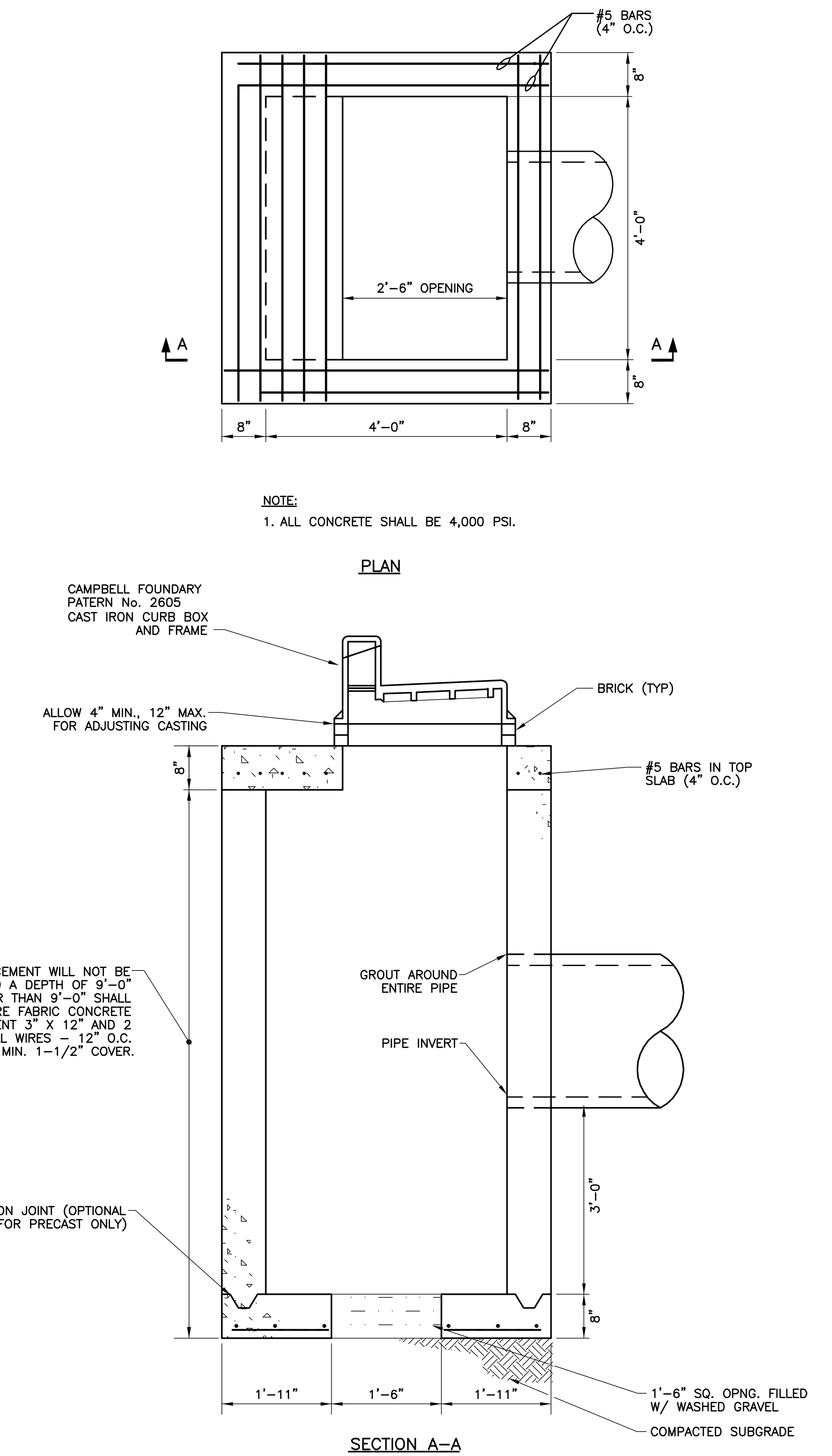

CATCH BASIN DETAIL

SCALE: NTS

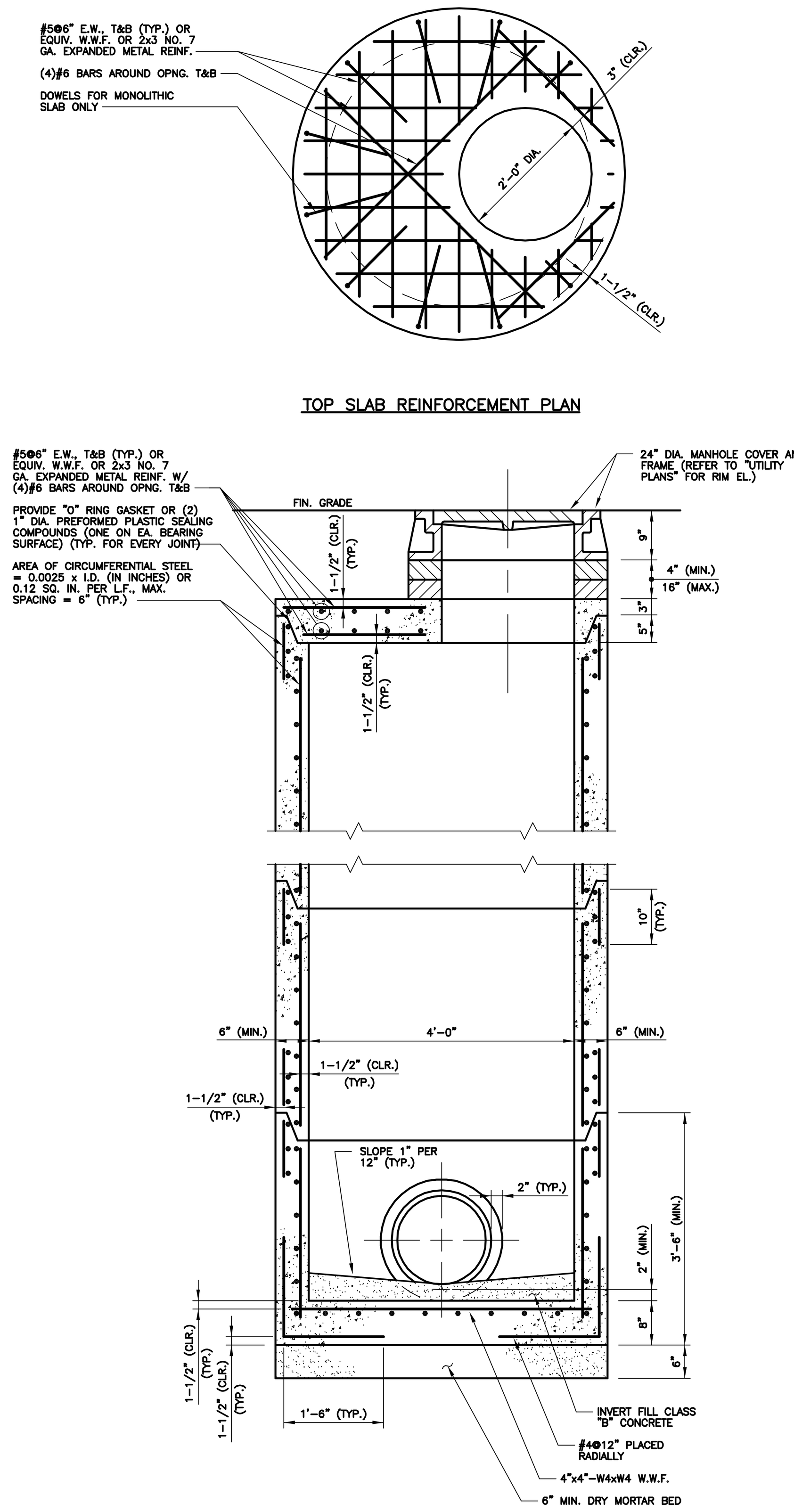

MANHOLE NOTES

1. PROVIDE #2 STEEL HOOP AROUND ALL PIPE OPENINGS WITH 1-1/2" CLEARANCE.
2. PROVIDE 2" MIN. COVER ON ALL REINFORCEMENT UNLESS OTHERWISE NOTED. OTHERWISE NOTED.
3. SEWER PIPE MANHOLE INVERTS SHALL BE CAST-IN-PLACE TO CENTERLINE OF PIPE.
4. PIPE OPENINGS, IF SQUARE, ARE 3" LARGER THAN O.D. OF PIPE; IF ROUND PIPE, ARE 2" LARGER THAN O.D. OF PIPE.
5. PROVIDE MANHOLE STEPS IN ALL SANITARY MANHOLES.

DRAINAGE MANHOLE DETAIL

SCALE: NTS

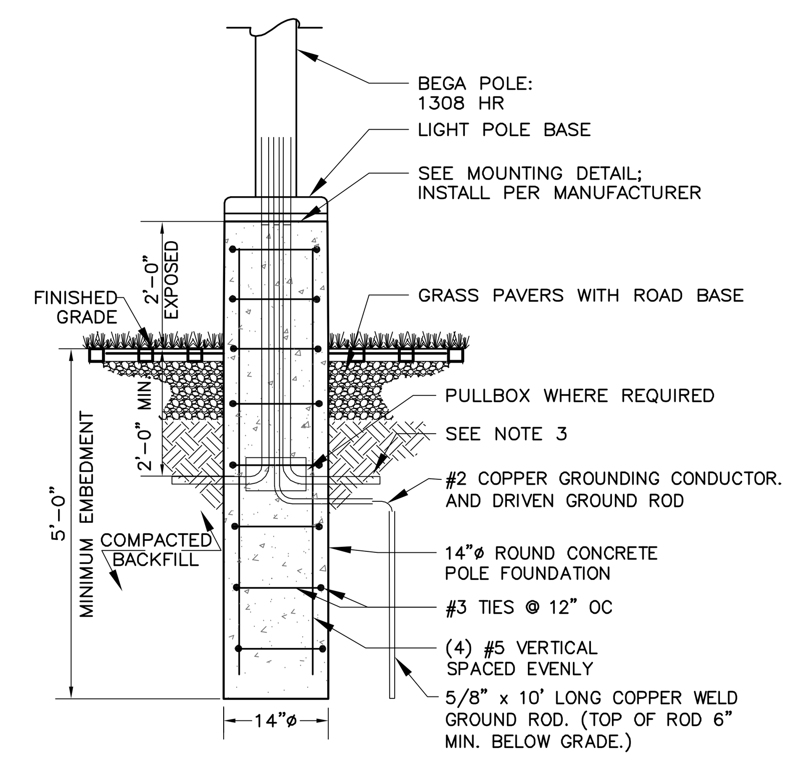

LIGHT POLE - FOOTING

AT GRASS PAVEMENT OVERFLOW PARKING AREAS
SCALE: NTS

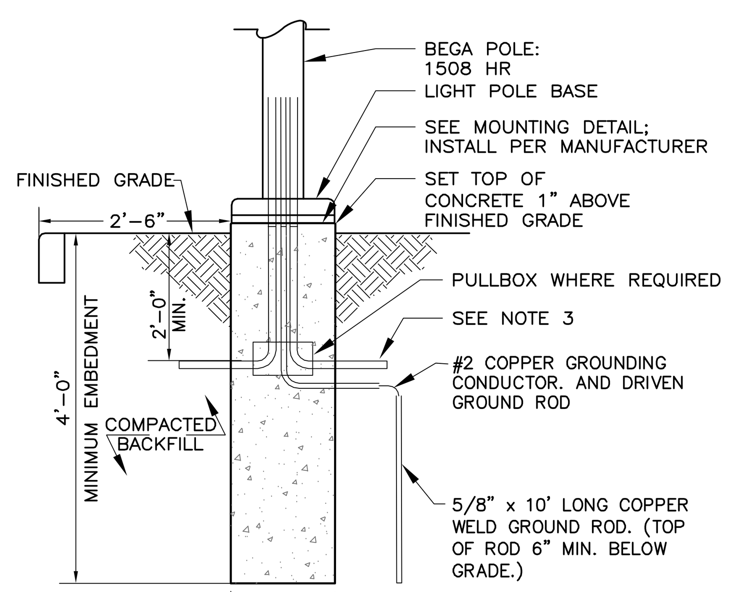

LIGHT POLE - FOOTING

AT CURBED AREAS
SCALE: NTS

NOTES

1. CONCRETE TO BE NORMAL WEIGHT, AIR ENTRAINED 3,000 PSI @ 28 DAYS.
2. CONTRACTOR TO VERIFY ANCHOR BOLT PATTERN, PROJECTION AND SIZE PRIOR TO FABRICATION AND INSTALLATION.
3. PROVIDE BUSHED RIGID CONDUITS SIZED AS REQUIRED FOR BRANCH CIRCUIT & GROUNDING CONDUCTOR. PROVIDE CONDUIT CAP ON CONDUIT RESERVED FOR FUTURE USE.
4. ANCHOR BOLT ASSEMBLE TO BE PROVIDED BY POLE MANUFACTURER AND INSTALLED ACCORDING TO MANUFACTURER TEMPLATE AND RECOMMENDATIONS.
5. EDGE OF LIGHT POLE FOOTINGS SHALL BE SET BACK A MINIMUM 2'-6" FROM FACE OF CURB.

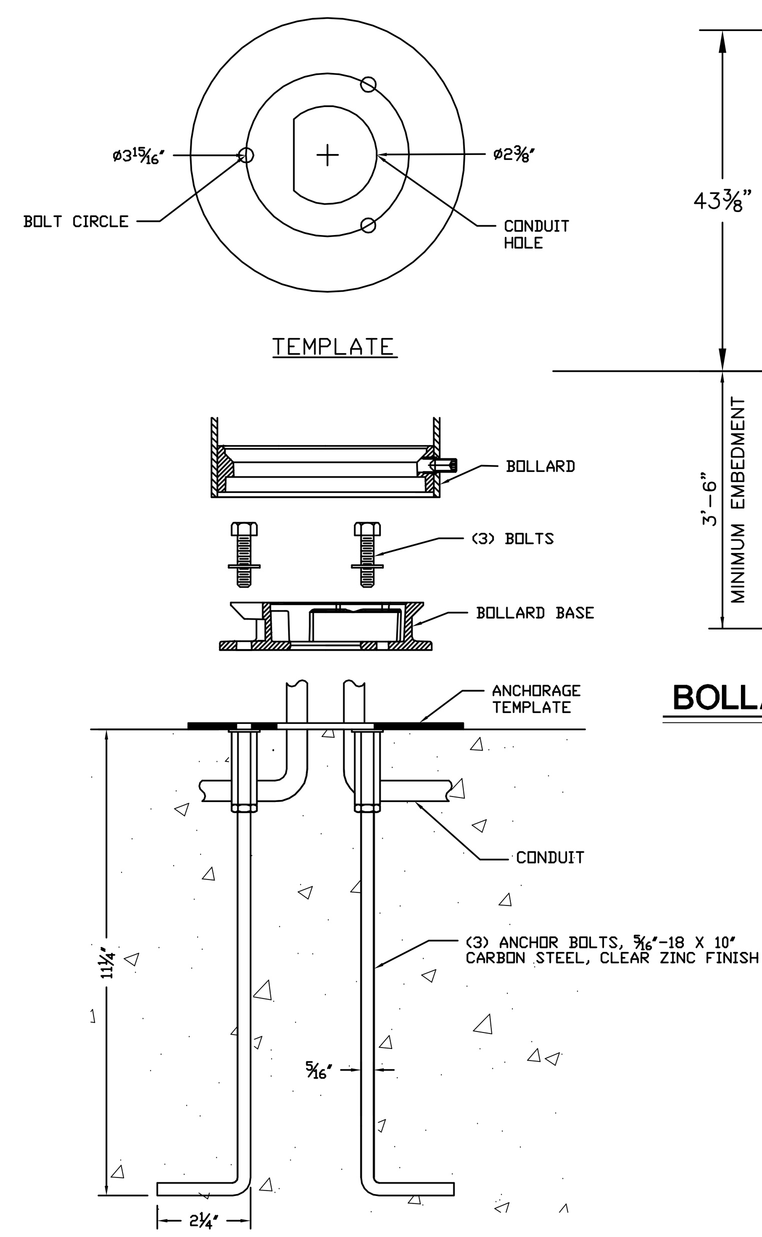

BOLLARD - MOUNTING DETAILS

SCALE: NTS

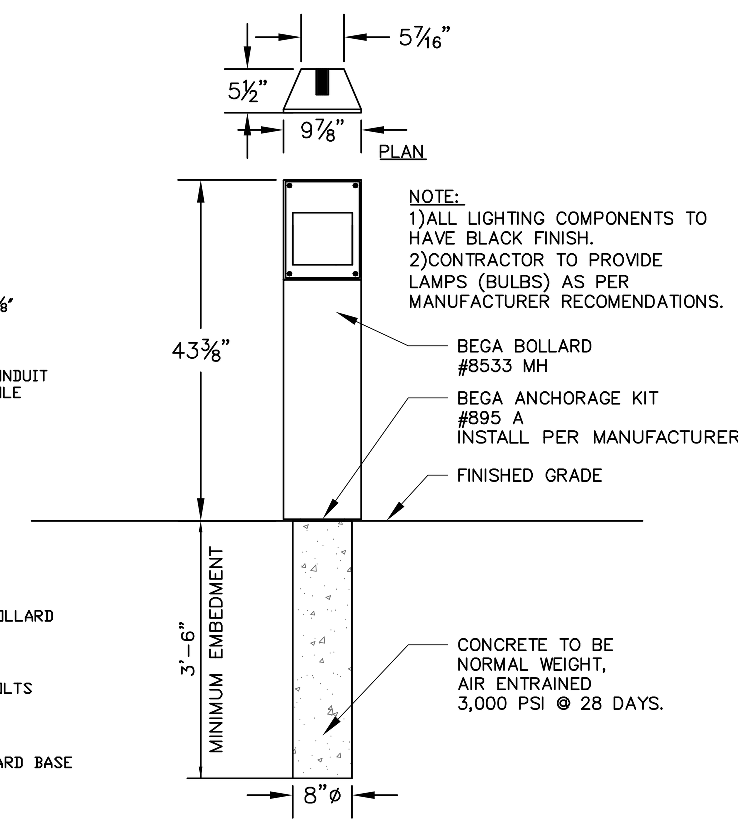

BOLLARD - SECTION & FOOTING DETAIL

SCALE: NTS

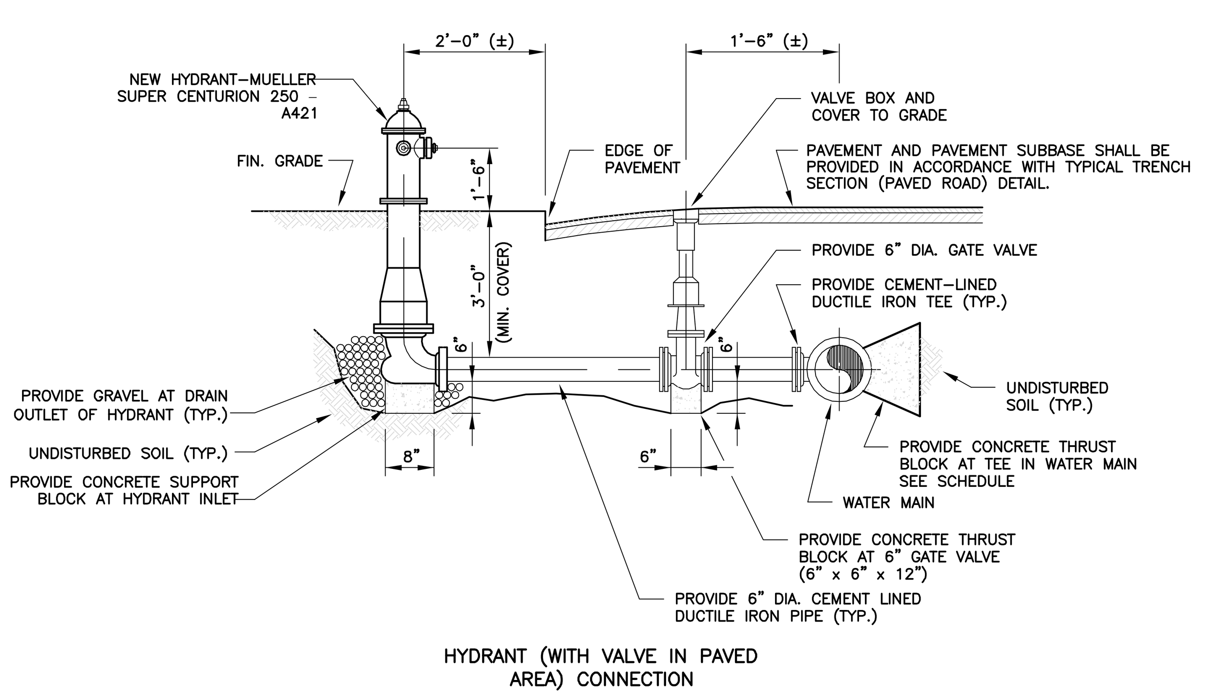

HYDRANT (WITH VALVE IN PAVED AREA) CONNECTION

HYDRANT CONNECTION NOTES:

1. ALL HYDRANT VALVES SHALL BE ANCHORED TO TEES BY MEANS OF SPECIAL MECHANICAL JOINT ANCHORING FITTINGS (MJ FIELD LOK SERIES DI, AS MANUF. BY TYLER PIPE, OR APPROVED EQUAL). THE ADDITIONAL COST(S) OF THESE FITTTINGS SHALL BE INCLUDED IN THE OVERALL COST ASSOCIATED WITH THE HYDRANT CONNECTION.
2. ALL HYDRANTS SHALL BE ANCHORED TO THE HYDRANT VALVE OR HYDRANT TEE BY MEANS OF SPECIAL MECHANICAL JOINT ANCHORING FITTINGS (MJ FIELD LOK SERIES DI, AS MANUF. BY TYLER PIPE., OR APPROVED EQUAL). THE ADDITIONAL COST(S) OF THESE FITTTINGS SHALL BE INCLUDED IN THE OVERALL COST ASSOCIATED WITH THE HYDRANT CONNECTION.
3. THE CONTRACTOR SHALL PROVIDE A 6" DIA. CEMENT-LINED DUCTILE IRON PIPE BETWEEN THE WATER MAIN AND GATE VALVE, AND GATE VALVE TO HYDRANT SHOE. THE PIPE SHALL BE INCLUDED IN THE OVERALL COST ASSOCIATED WITH THE HYDRANT CONNECTION.
4. THE CONTRACTOR SHALL PROVIDE THREE (3) CUBIC FEET (MIN.) OF WELL GRADED, WASHED GRAVEL FROM THE BOTTOM OF THE HYDRANT TO ONE (1) FOOT ABOVE THE BOTTOM FLANGE.
5. THE UNIT COST OF THE FIRE HYDRANT SHALL INCLUDE HYDRANT, VALVE, TEE, FITTINGS, CONNECTION PIPE, AND ALL APPURTENANCES NECESSARY FOR THE COMPLETE INSTALLATION OF THE FIRE HYDRANT.

HYDRANT DETAIL

SCALE: NTS

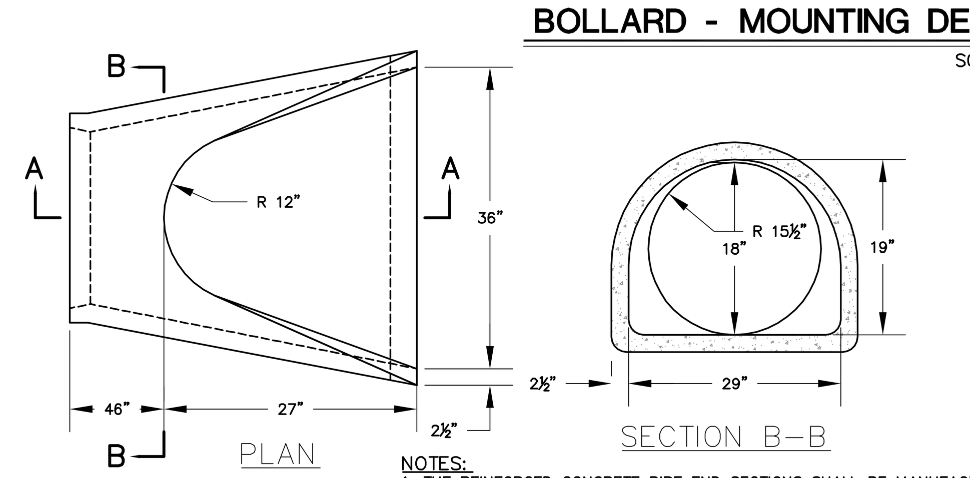

NOTES:
1. THE REINFORCED CONCRETE PIPE END SECTIONS SHALL BE MANUFACTURED IN ACCORDANCE WITH THE SPECIFICATIONS AND ASTM DES. G TG CLASS III EXCEPT THAT THE LOAD AND STRENGTH TESTS WILL NOT BE REQUIRED.
2. WHERE TWO CAGES OF REINFORCING ARE REQUIRED, IT SHALL APPLY TO BARREL AT END SECTION ONLY REINFORCING FOR APRON SECTION SHALL BE ONE CAGE EQUAL TO THE INNER CAGE OF THAT REQUIRED IN BARREL.
3. JOINTS SHALL BE TONGUE AND GROOVE OR BELL AND SPIGOT AS REQUIRED.

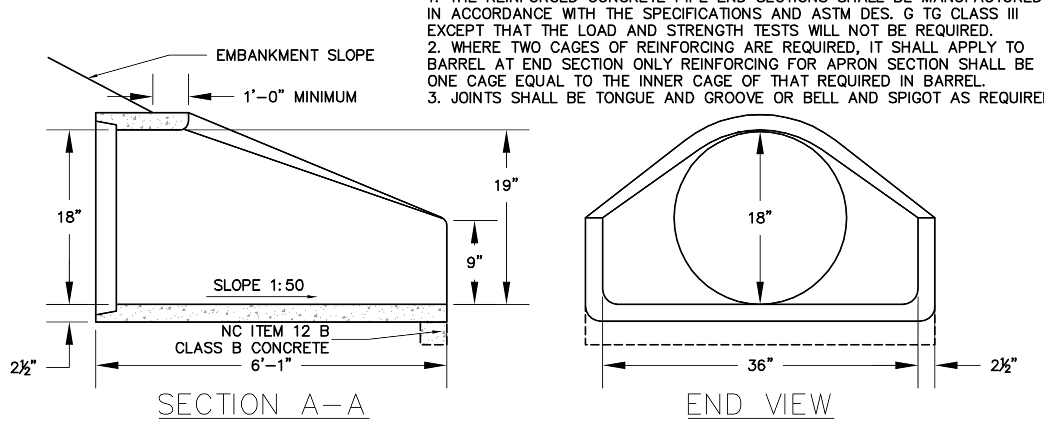

CONCRETE PIPE END SECTION

SCALE: NTS

THRUST BLOCK BEARING AREA REQUIRED IN SQ. FT.					
PIPE SIZE	FITTING TYPE				
	11-1/4°	22-1/2°	45°	90°	TEE
4"-6"	1.0	1.0	2.0	3.0	2.0
8"	2.0	2.0	3.0	5.0	4.0
10"	2.5	2.5	4.5	8.5	6.0
12"	2.5	3.5	6.5	12.0	8.5

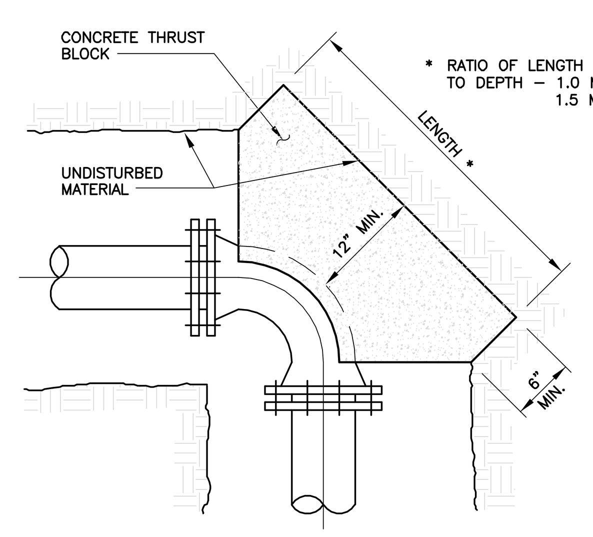

NOTE:
THRUST BLOCKS SHALL BE PROVIDED PER SPECIFICATIONS AND SHALL OCCUR AT ALL CHANGES IN DIRECTION, HORIZONTAL OR VERTICAL, PLUGS, WET TAPS, VALVES, AND ALL OTHER POINTS REQUIRING RESISTANCE TO PRESSURE.

CONCRETE THRUST BLOCK DETAIL

SCALE: NTS

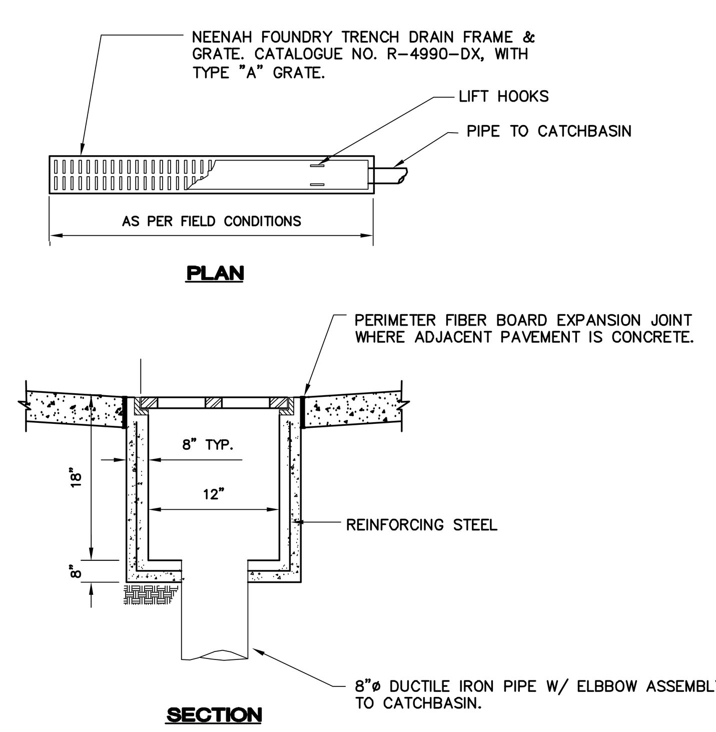

TRENCH DRAIN DETAIL

SCALE: NTS

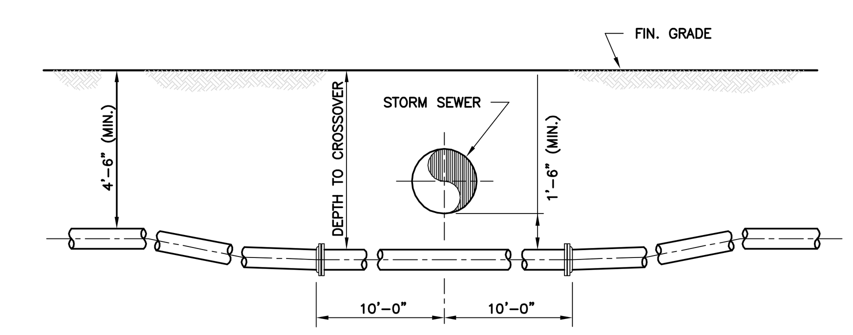

TYPICAL PIPE CROSSING DETAIL

SCALE: NTS

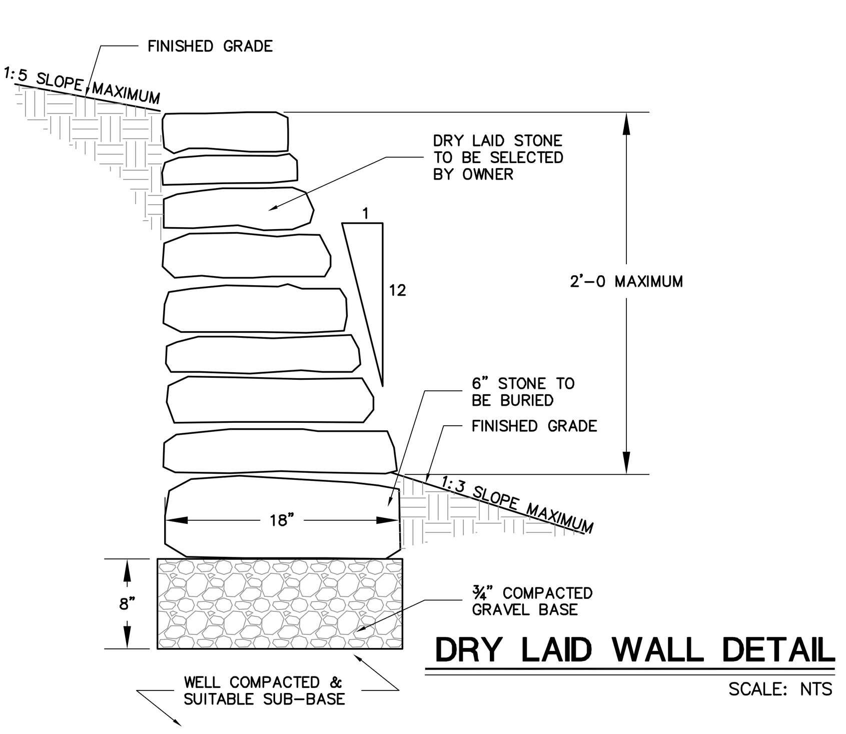

DRY LAID WALL DETAIL

SCALE: NTS

THIS DRAWING IS NOT TO BE USED FOR CONSTRUCTION PURPOSES. IT IS INTENDED FOR SITE PLAN APPROVAL ONLY.

NO.	DATE	REVISION DESCRIPTION	INT.
1	11/24/09	REVISED AND REISSUED FOR FEIS	MAD/LMB
2	12/21/09	REVISED PER NCFM COMMENTS	JH
3	06/24/10	REVISED PER FIRE MARSHALL	MAD
4	09/16/10	REVISED AND REISSUED FOR FEIS	MAD

UNAUTHORIZED ALTERATION OR ADDITION TO THIS DOCUMENT IS A VIOLATION OF SECTION 7209 OF THE NEW YORK STATE EDUCATION LAW.
THESE DOCUMENTS (OR COPIES OF ANY THEREOF) PREPARED BY OR BEARING THE SEAL OF THE ENGINEER, SHALL NOT BE REUSED FOR ANY EXTENSIONS OF THE PROJECT OR ANY OTHER PROJECT WITHOUT THE WRITTEN CONSENT OF THE ENGINEER.

CAMERON ENGINEERING & ASSOCIATES, LLP
100 Sunnyside Boulevard, Suite 100, Woodbury, NY 11797, PH: (516) 827-4900 FX: (516) 827-4920
330 Fifth Avenue, Suite 1300, New York, NY 10001, PH: (212) 324-4000 FX: (212) 481-3274

PROJECT NAME: JEWISH CONGREGATION OF BROOKVILLE

PROJECT LOCATION: INCORPORATED VILLAGE OF MUTTONTOWN NASSAU COUNTY, NEW YORK

TITLE: SITE DETAILS 2

DISCIPLINE: CIVIL

PROJECT ENGINEER: JG	PROJECT NO. CE1064A	DRAWING NO.
DESIGNED BY: MAD	JOB NO. CE1064L	7
DRAWN BY: MAD	DATE: OCT. 2007	
CHECKED BY: JRA	SCALE:	SHEET 7 OF 8

PLOT SCALE:

O:\CE1064\design\Site Plan\05 Details.dwg, Layout2, 9/16/2010 11:58:59 AM, MDegiglio

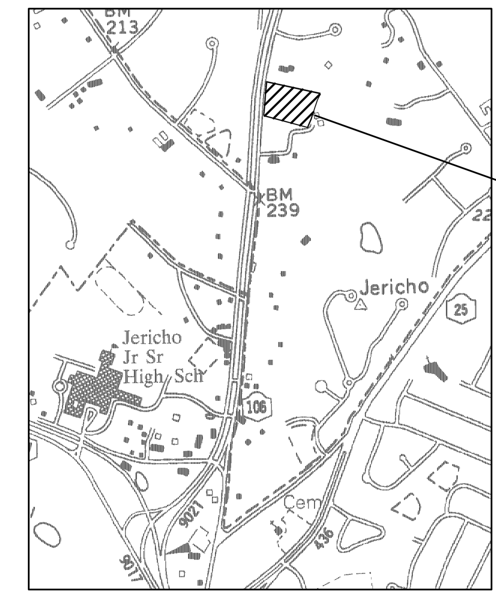

LOCATION MAP 1"=50'

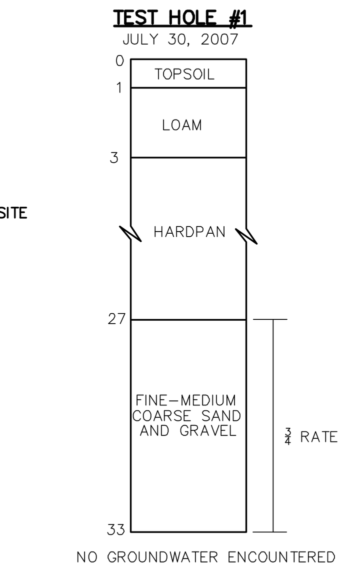

SITE DATA

1. OWNER: THE JEWISH CONGREGATION OF BROOKVILLE
ROUTE 106, MUTTONTOWN, NEW YORK

GENERAL NOTES

1. ALL EXISTING CONDITION INFORMATION SHOWN IS BASED ON A PLAN PREPARED BY JERRY LARVE L.S. DATED:
2. THIS PLAN SHALL BE USED FOR SANITARY SYSTEM CONSTRUCTION PURPOSES ONLY. REFER TO GRADING AND DRAINAGE PLAN FOR CURRENT GRADING AND DRAINAGE INFORMATION.
3. CRANE-DUG TESTHOLE WAS PERFORMED ON JULY 30, 2007 AND WITNESSED BY CAMERON ENGINEERING, SIDNEY B. BOWNE & SON NASSAU COUNTY HEALTH DEPARTMENT.

SANITARY SYSTEM NOTES

1. ACCEPTANCE AND APPROVAL OF THE WASTE DISPOSAL FACILITIES SHOWN HEREON DOES NOT CONSTITUTE APPROVAL OF THE STRUCTURAL STABILITY OF THE SYSTEM BY THE NASSAU COUNTY HEALTH DEPARTMENT.
2. SEPTIC TANKS SHALL BE PRECAST REINFORCED CONCRETE WITH A MINIMUM FOUR (4) INCH WALL THICKNESS. ALL PRECAST SANITARY STRUCTURES SHALL MEET NCDH STANDARDS. ALL CONCRETE SHALL BE 4,000 P.S.I. MINIMUM.
3. CHIMNEYS SHALL BE USED TO BRING ACCESS MANHOLE FRAME AND COVERS TO GRADE. ALL CHIMNEYS SHALL BE FIRMLY MORTARED TO PREVENT LATERAL MOVEMENT. A CHIMNEY WITH A MINIMUM INSIDE DIAMETER OF TWO (2) FEEET MAY BE USED FOR EXTENSIONS UP TO FOUR (4) FEET IN HEIGHT. A THIRTY (30) INCH INSIDE DIAMETER CHIMNEY MAY BE USED TO EXTEND THE MAXIMUM CHIMNEY HEIGHT TO SEVEN (7) FEET.
4. BACKFILL SHALL BE PLACED TO PREVENT LATERAL MOVEMENT OF PRECAST SECTION AND CHIMNEYS. ANY COBBLES IN EXCESS OF SIX (6) INCHES SHALL BE EXCLUDED FROM BACKFILL.
5. A PROFESSIONAL ENGINEER OR LICENSED LAND SURVEYOR LICENSED TO PRACTICE IN NEW YORK STATE SHALL INSPECT THE EXCAVATION, SEWAGE DISPOSAL FACILITIES, AND SHALL ALSO INSPECT THE CONSTRUCTION OF THE DRAINAGE FACILITIES ON INDIVIDUAL LOTS AND NONDEDICATED AREAS. THE PROJECT CONSULTANT SHALL CERTIFY TO THE NASSAU COUNTY DEPARTMENT OF HEALTH NO LATER THAN 30 DAYS FOLLOWING THE COMPLETION OF CONSTRUCTION THAT THE SEWAGE DISPOSAL AND DRAINAGE FACILITIES HAVE BEEN CONSTRUCTED IN SUBSTANTIAL CONFORMANCE WITH THE APPROVED PLAN.
6. GARBAGE GRINDERS ARE PROHIBITED.
7. CONSTRUCTION OF APPLICABLE WATER AND SEWAGE FACILITIES IN THIS SITE PLAN SHALL CONFORM TO PART 74, TITLE 10 AND PART 653 TITLE 6 OF THE OFFICIAL COMPILATION OF CODES, RULES AND REGULATIONS OF THE STATE OF NEW YORK.
8. REFER TO THE APPROVED SITEPLAN FOR DETAILS AND OF THE STORM WATER DRAINAGE SYSTEM AND STRUCTURES REQUIRED AS PART OF THIS PLAN.
9. SEPTIC TANKS, LEACHING POOLS AND OTHER SANITARY SYSTEM STRUCTURES SHALL BE KEPT CLEAR OF WALKWAYS, DRIVEWAYS AND OTHER PAVED AREAS.
10. COMMENCING FIVE (5) YEARS AFTER NASSAU COUNTY DEPARTMENT OF HEALTH APPROVAL OF THIS PLAN, ANY SUBSEQUENT CONSTRUCTION OF ON-SITE SANITARY DISPOSAL SYSTEMS SHALL CONFORM TO THE NASSAU COUNTY DEPARTMENT OF HEALTH STANDARDS IN EFFECT AT THE TIME OF CONSTRUCTION.
11. SANITARY SEWER PIPE SHALL BE DUCTILE IRON PIPE CLASS 53. ALL PIPE SHALL BE 4" DIAMETER AND SLOPED AT A MINIMUM 1/8"/FT. UNLESS OTHERWISE NOTED.
12. THE MINIMUM HORIZONTAL AND VERTICAL CLEARANCE BETWEEN WATER, WATER SERVICE, SANITARY AND DRAINAGE PIPING STRUCTURES SHALL BE TEN (10) FEET AND EIGHTEEN (18) INCHES RESPECTIVELY.
13. PIPE TEES ARE TO BE FIRMLY CONNECTED TO PIPES AND SO LOCATED UNDER MANHOLES SO AS TO BE READILY ACCESSIBLE FOR CLEANING.
14. THE OPENING IN THE TRANSVERSE BAFFLE SHALL BE CENTERED EIGHTEEN (18) INCHES BELOW THE FLOW LINE AND SHALL EXTEND ACROSS THE FULL WIDTH OF TANK. THE OPENING SHALL BE AT LEAST EIGHT (8) INCHES HIGH
15. THE ON-SITE SEWAGE DISPOSAL SYSTEM HAS BEEN DESIGNED AS PER CALCULATIONS BELOW.
16. THE CONDITIONS NOTED ON THE NASSAU COUNTY DEPARTMENT OF HEALTH CERTIFICATE OF APPROVAL ARE AN INTERGRAL PART OF THIS DIVISION APPROVAL AND COMPLIANCE IS REQUIRED.
17. SANITARY ELEMENTS THAT ARE INSTALLED BENEATH PAVED AREAS SHALL HAVE ACCESS MANHOLES BROUGHT TO GRADE WITH TIGHT-FITTING CAST IRON FRAMES AND COVERS. IN LIEU OF THIS, AN ALTERNATE CONFIGURATION AS SHOWN IN FIGURE 13 OF APPENDIX B IN THE NCHD MANUAL OF ON SITE SYSTEMS, SHALL BE CONSIDERED ACCEPTABLE FOR SEPTIC TANKS AND LEACHNG POOLS INSTALLED BENEATH LANDSCAPED AREAS WHICH SHALL HAVE ACCESS MANHOLES WITH CONCRETE COVERS LOCATED BETWEEN 12 AND 24 INCHES BELOW FINAL GRADE.

LEGEND

- PROPOSED DRYWELL WITH GRATE
- PROPOSED DRYWELL WITH SOLID CAST IRON COVER AT GRADE
- MH-1 PROPOSED DRAINAGE MANHOLE
- TRENCH GRATE
- PROPOSED CATCH BASIN
- ES-3 DRAINAGE PIPE END SECTION
- PROPOSED SPOT ELEVATION
- TW 100.00 BW 99.50 PROPOSED TOP/BOTTOM OF WALL ELEVATION
- PROPOSED CONTOUR
- —D— PROPOSED STORM DRAINAGE PIPE
- CONCRETE THRUST BLOCK
- —W— PROPOSED WATER SERVICE
- —SAN— PROPOSED SANITARY PIPING
- —TEC— PROPOSED TELEPHONE-ELECTRC CABLE SERVICE
- SANITARY DISTRIBUTION POOL SOLID CAST IRON COVER AT GRADE
- LP SANITARY LEACHING POOL W/ CONCRETE COVER BELOW GRADE
- FUTURE EXPANSON SANITARY LEACHING POOL
- SANITARY LEACHING POOL FUTURE EXPANSION
- GT PROPOSED SANITARY GREASE TRAP
- ST PROPOSED SANITARY SEPTIC TANK

LEGEND (EXISTING)

- DECIDUOUS TREE TO REMAIN
- EVERGREEN TREE TO REMAIN
- DRAINAGE MANHOLE
- UTILITY POLE
- OVERHEAD WIRE
- HYDRANT
- SIGN
- TC EXISTING TOP OF CURB
- BC EXISTING BOTTOM OF CURB
- +260.1 EXISTING SPOT ELEVATION
- — — — EXISTING CONTOUR

SANITARY STRUCTURES

NO.	RIM	INV(IN)	INV(OUT)	E.D.*
GREASE TRAP	250.0	247.10	246.85	–
SEPTIC TANK	245.5	N235.20	234.95	–
		E235.20		
DP	244.78	234.90	234.65	16'
	–			
LP 1	–	234.45	–	16'
LP 2	–	234.35	–	16'
LP 3	–	234.45	–	16'
LP 4	–	234.18	–	16'
LP 5	–	234.45	–	16'

* EFFECTIVE DEPTH (E.D.) OF LEACHING POOL SHALL BE PLACED INTO RATEABLE MATERIAL

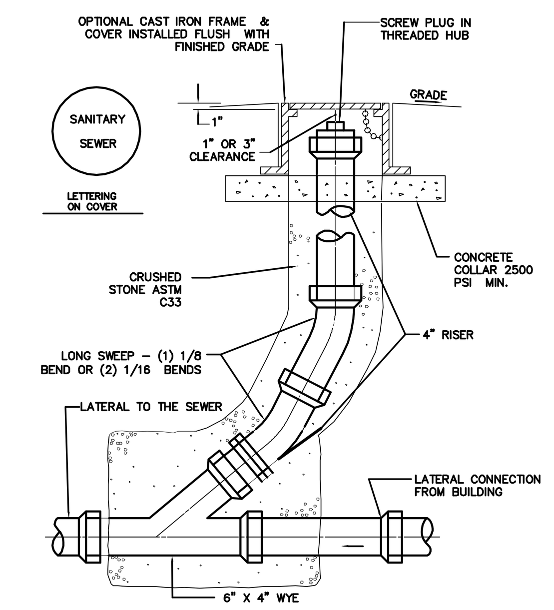

SEWER CLEANOUT DETAIL

NOT TO SCALE

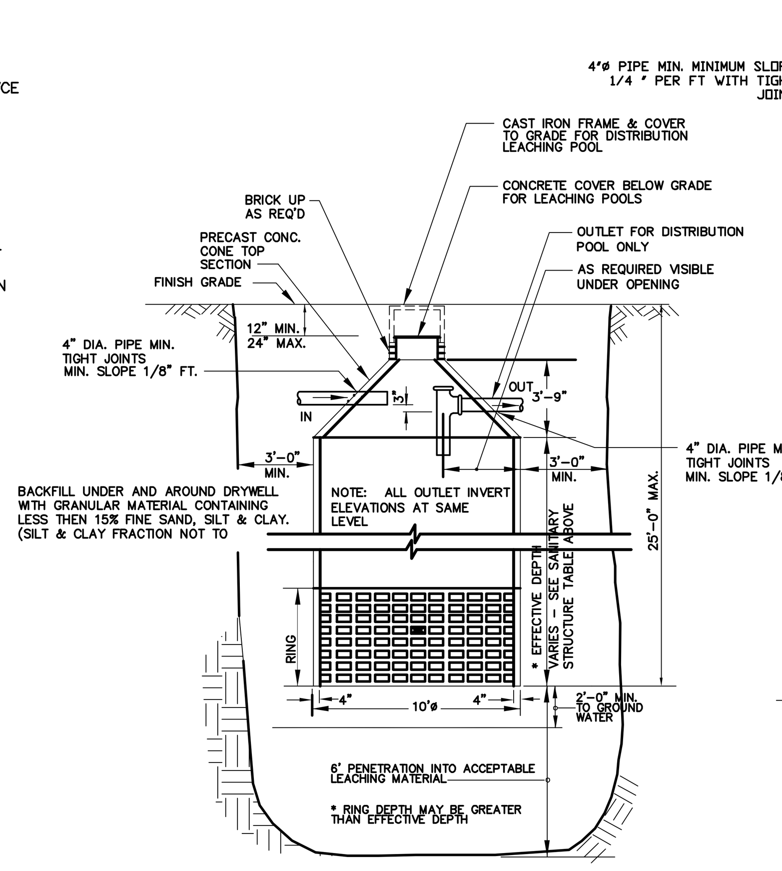

LEACHING POOL AND DISTRIBUTION LEACHING POOL DETAIL

NOT TO SCALE

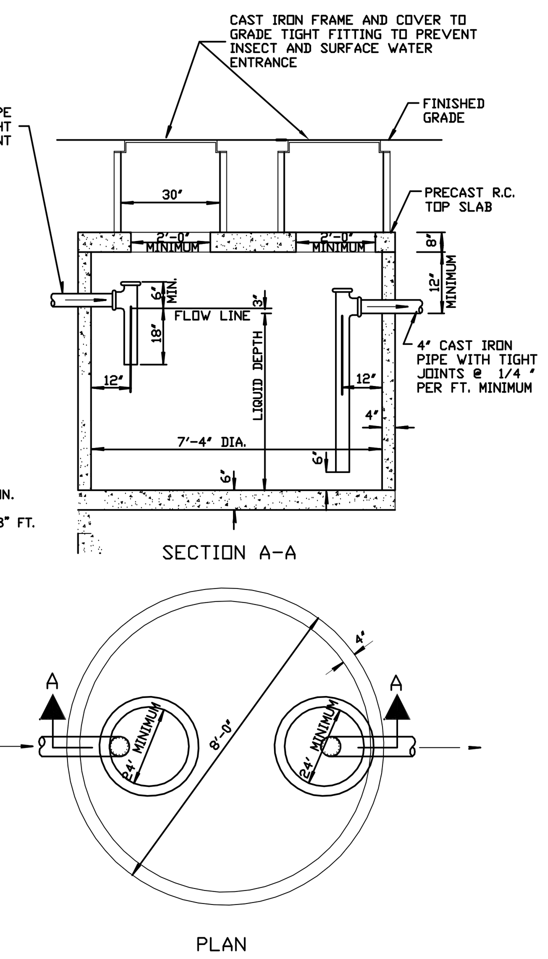

GREASE TRAP DETAIL (1,580 GAL)

NOT TO SCALE

SANITARY SYSTEM DESIGN

DESIGN FLOW FOR PROPOSED BUILDING

5 GALS./DAY/PERSON x 900 PEOPLE/DAY = 4,500 GALS./DAY

GREASE TRAP

25% OF DAILY FLOW = 1,125 GAL
1,580 GAL. CAP. PROVIDED

SEPTIC TANK DESIGN

1 DAY STORAGE
USE SEPTIC TANK 4,500 GALLON CAPACITY
(1 – 12'ø 6' LIQUID DEPTH, 7' HEIGHT)

LEACHING POOL DESIGN

5 GALS./DAY/PERSON x 900 PEOPLE/DAY = 4,500 GALS./DAY
DESIGN SYSTEM BASED ON 3/4 RATE COLLARED SOIL

$$\frac{4{,}500\ \text{GALS./DAY}}{1.5\ \text{GALS./SF/DAY}} = 3{,}000\ \text{SF OF STORAGE REQUIRED}$$

USE 10'ø LEACHING POOLS $\frac{3{,}000\ \text{SF/REQ'D}}{31.4\ \text{SF/VF}} = 95.5$ VF REQUIRED

USE (6) – 10'ø x 16' EFF. DEPTH LEACHING POOLS = 96 VF PROVIDED

DESIGN 50% EXPANSION AREA BASED ON 3/4 RATE COLLARED SOIL
4,500 GPD DESIGN FLOW x 50%= 2,250 GPD

$$\frac{2{,}250\ \text{GALS./DAY}}{1.5\ \text{GALS./SF/DAY}} = 1500\ \text{SF OF STORGE REQUIRED}$$

USE 10'ø LEACHING POOLS $\frac{1500\ \text{SF/REQ'D}}{31.4\ \text{SF/VF}} = 47.8$ VF REQUIRED

USE (3) – 10'ø x 16' EFF. DEPTH LEACHING POOLS

TOTAL CAPACITY PROVIDED = 4,521 GALS./DAY
TOTAL CAPACITY REQUIRED = 4,500 GALS./DAY

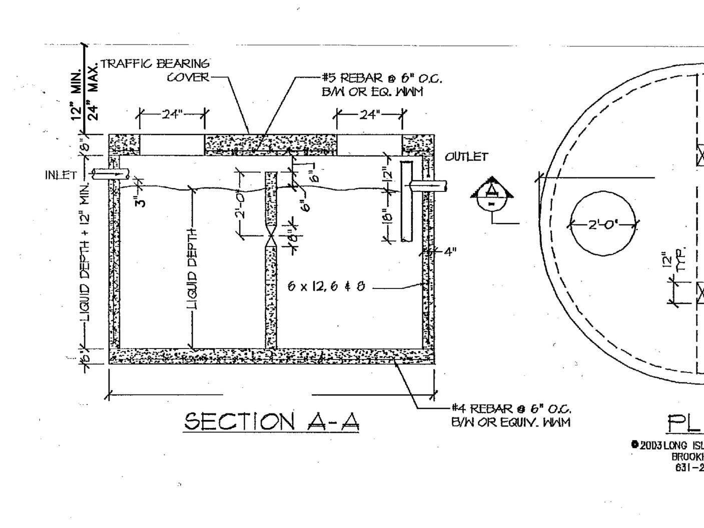

NOTES:
1. CONCRETE 4,000 PSI @ 28 DAYS
2. REBAR TO BE ASTM A-615 GRADE 60
3. WELDED WIRE FABRIC ASTM A-185
4. DESIGNED FOR AASHTO H-20
5. ALL COMPONENTS TO BE COUNTY HEALTH DEPT. APPROVED.

SEPTIC TANK

NOT TO SCALE

NCDOH APPROVAL

GRAPHIC SCALE

30 0 15 30 60 120

(IN FEET)

THIS DRAWING IS NOT TO BE USED FOR CONSTRUCTION PURPOSES. IT IS INTENDED FOR SITE PLAN APPROVAL ONLY.

NO.	DATE	REVISION DESCRIPTION	INT.
1	11/24/09	REVISED AND REISSUED FOR FEIS	MAD/LMB
2	12/21/09	REVISED PER NCFM COMMENTS	JH
3	06/24/10	REVISED PER FIRE MARSHALL	MAD
4	09/16/10	REVISED AND REISSUED FOR FEIS	MAD

UNAUTHORIZED ALTERATION OR ADDITION TO THIS DOCUMENT IS A VIOLATION OF SECTION 7209 OF THE NEW YORK STATE EDUCATION LAW.

THESE DOCUMENTS (OR COPIES OF ANY THEREOF) PREPARED BY OR BEARING THE SEAL OF THE ENGINEER, SHALL NOT BE REUSED FOR ANY EXTENSIONS OF THE PROJECT OR ANY OTHER PROJECT WITHOUT THE WRITTEN CONSENT OF THE ENGINEER.

CAMERON ENGINEERING & ASSOCIATES, LLP
100 Sunnyside Boulevard, Suite 100, Woodbury, NY 11797, PH: (516) 827-4900 FX: (516) 827-4920
330 Fifth Avenue, Suite 1300, New York, NY 10001, PH: (212) 324-4000 FX: (212) 481-3274

PROJECT NAME:
JEWISH CONGREGATION OF BROOKVILLE

PROJECT LOCATION:
INCORPORATED VILLAGE OF MUTTONTOWN
NASSAU COUNTY, NEW YORK

TITLE:
SANITARY SYSTEM PLAN AND SANITARY DETAILS

DISCIPLINE: CIVIL

PROJECT ENGINEER: JG	PROJECT NO. CE1064A	DRAWING NO. 8
DESIGNED BY: MAD	JOB NO. CE1064L	
DRAWN BY: MAD	DATE: OCT. 2007	
CHECKED BY: JRA	SCALE: 1"=30'	SHEET 8 OF 8

PLOT SCALE:

O:\CE1064L\design\Site Plan\06 sanitary plan.dwg, Layout1, 9/16/2010 11:59:55 AM, MDegiglio

© 2010, ARMSTRONG • BERGER
LANDSCAPE ARCHITECTS • PLANNERS
CONSTRUCTION MANAGEMENT
These drawings and/or specifications provided within this document set are prepared specifically for this noted project. These documents are not to be used in whole or in part for any other purposes or by any other parties other than those under contract or with specific written permissions from Armstrong-Berger.
Reproduction is prohibited.

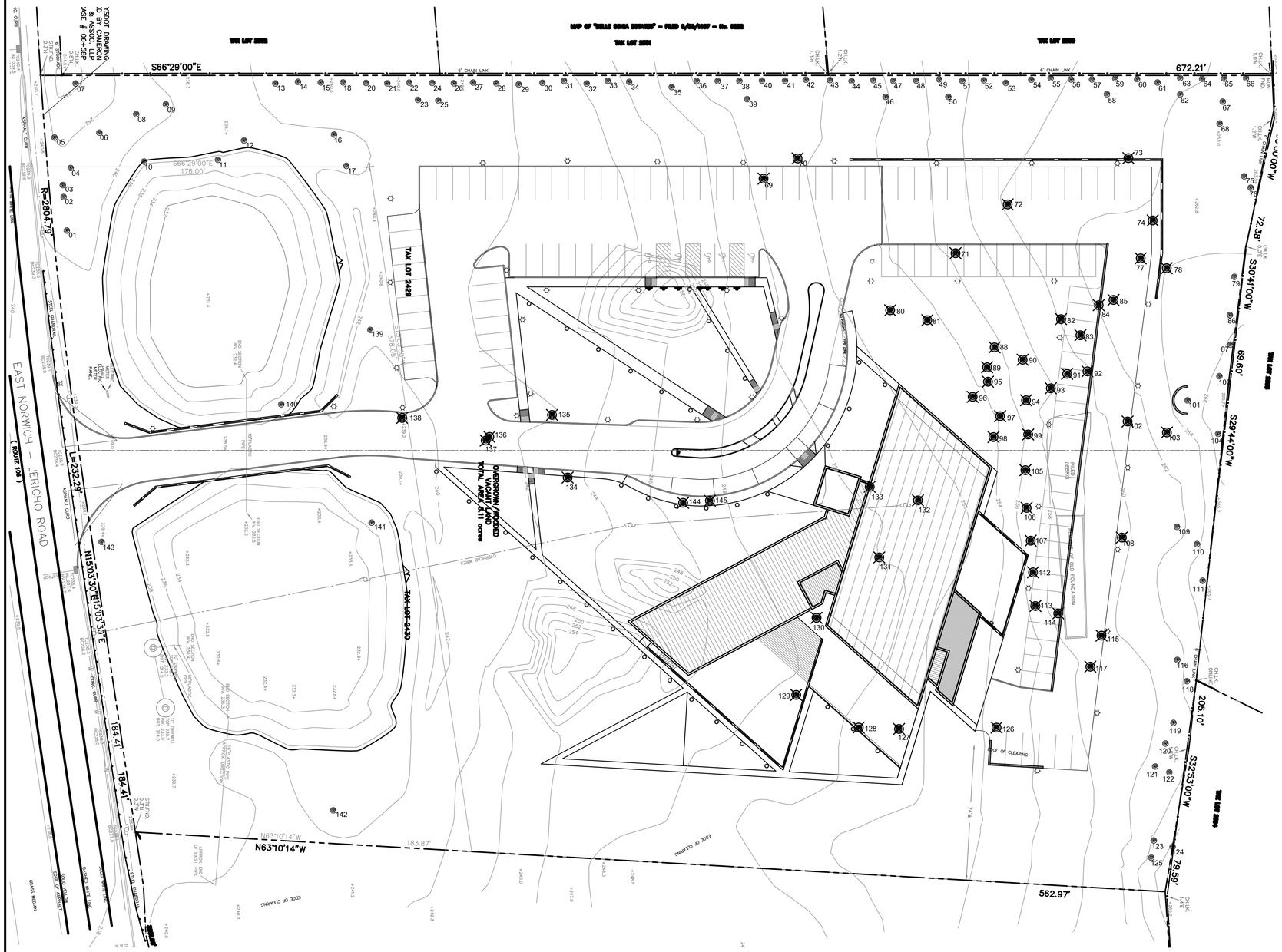

01 EXISTING TREE REMOVAL PLAN
SCALE : 1"=30'

TREE CHART							
NO.	CALIPER INCH	TREE SPECIES	REMOVE/REMAIN	NO.	CALIPER INCH	TREE SPECIES	REMOVE/REMAIN
01	12"	DECIDUOUS TREE	TO REMAIN	73	8"	DECIDUOUS TREE	REMOVE
02	8"	DECIDUOUS TREE	TO REMAIN	74	10"	MAPLE	REMOVE
03	8"	DECIDUOUS TREE	TO REMAIN	75	18"	OAK	TO REMAIN
04	10"	DECIDUOUS TREE	TO REMAIN	76	20"	DECIDUOUS TREE	TO REMAIN
05	8"	DECIDUOUS TREE	TO REMAIN	77	28"	DECIDUOUS TREE	REMOVE
06	28"	DECIDUOUS TREE	TO REMAIN	78	18"	SPRUCE	REMOVE
07	28"	MAPLE	TO REMAIN	79	16"	DECIDUOUS TREE	TO REMAIN
08	16"	SPRUCE	TO REMAIN	80	8"	BIRCH	REMOVE
09	8"	DECIDUOUS TREE	TO REMAIN	81	10"	CHERRY	REMOVE
10	14"	DECIDUOUS TREE	TO REMAIN	82	20"	CONIFER	REMOVE
11	16"	DECIDUOUS TREE	TO REMAIN	83	14"	CONIFER	REMOVE
12	10"	DECIDUOUS TREE	TO REMAIN	84	8"	BIRCH	REMOVE
13	24"	MAPLE	TO REMAIN	85	10"	DECIDUOUS TREE	REMOVE
14	24"	MAPLE	TO REMAIN	86	20"	DECIDUOUS TREE	TO REMAIN
15	24"	MAPLE	TO REMAIN	87	14"	OAK	TO REMAIN
16	18"	DECIDUOUS TREE	TO REMAIN	88	8"	DECIDUOUS TREE	REMOVE
17	26"	DECIDUOUS TREE	TO REMAIN	89	10"	DECIDUOUS TREE	REMOVE
18	24"	MAPLE	TO REMAIN	90	24"	DECIDUOUS TREE	REMOVE
19			TO REMAIN	91	10"	DECIDUOUS TREE	REMOVE
20	16"	MAPLE	TO REMAIN	92	14"	DECIDUOUS TREE	REMOVE
21	22"	MAPLE	TO REMAIN	93	24"	DECIDUOUS TREE	REMOVE
22	14"	MAPLE	TO REMAIN	94	14"	CHERRY	REMOVE
23	8"	SPRUCE	TO REMAIN	95	12"	PINE	REMOVE
24	14"	MAPLE	TO REMAIN	96	12"	DECIDUOUS TREE	REMOVE
25	8"	SPRUCE	TO REMAIN	97	12"	PINE	REMOVE
26	14"	MAPLE	TO REMAIN	98	8"	DECIDUOUS TREE	REMOVE
27	12"	MAPLE	TO REMAIN	99	16"	DECIDUOUS TREE	REMOVE
28	18"	MAPLE	TO REMAIN	100	18"	OAK	TO REMAIN
29	18"	MAPLE	TO REMAIN	101	22"	DECIDUOUS TREE	TO REMAIN
30	18"	MAPLE	TO REMAIN	102	N/A		REMOVE
31	12"	MAPLE	TO REMAIN	103	14"	DECIDUOUS TREE	REMOVE
32	32"	MAPLE	TO REMAIN	104	20"	OAK	TO REMAIN
33	8"	MAPLE	TO REMAIN	105	14"	LIVE OAK	REMOVE
34	14"	MAPLE	TO REMAIN	106	18"	DECIDUOUS TREE	REMOVE
35	12"	MAPLE	TO REMAIN	107	18"	DECIDUOUS TREE	REMOVE
36	24"	MAPLE	TO REMAIN	108	8"	DECIDUOUS TREE	REMOVE
37	12"	MAPLE	TO REMAIN	109	12"	DECIDUOUS TREE	TO REMAIN
38	N/A		TO REMAIN	110	12"	DECIDUOUS TREE	TO REMAIN
39	10"	CHERRY	TO REMAIN	111	12"	DECIDUOUS TREE	TO REMAIN
40	12"	MAPLE	TO REMAIN	112	18"	DECIDUOUS TREE	REMOVE
41	16"	MAPLE	TO REMAIN	113	22"	DECIDUOUS TREE	REMOVE
42	16"	MAPLE	TO REMAIN	114	24"	CONIFER	REMOVE
43	20"	MAPLE	TO REMAIN	115	12"	OAK	REMOVE
44	16"	MAPLE	TO REMAIN	116	10"	DECIDUOUS TREE	TO REMAIN
45	16"	MAPLE	TO REMAIN	117	10"	BIRCH	REMOVE
46	10"	SPRUCE	TO REMAIN	118	16"	DECIDUOUS TREE	TO REMAIN
47	14"	MAPLE	TO REMAIN	119	12"	OAK	TO REMAIN
48	24"	MAPLE	TO REMAIN	120	12"	DECIDUOUS TREE	TO REMAIN
49	18"	MAPLE	TO REMAIN	121	8"	DECIDUOUS TREE	TO REMAIN
50	12"	SPRUCE	TO REMAIN	122	8"	DECIDUOUS TREE	TO REMAIN
51	14"	MAPLE	TO REMAIN	123	10"	DECIDUOUS TREE	TO REMAIN
52	10"	MAPLE	TO REMAIN	124	N/A		TO REMAIN
53	22"	MAPLE	TO REMAIN	125	16"	OAK	TO REMAIN
54	20"	MAPLE	TO REMAIN	126	12"	DECIDUOUS TREE	REMOVE
55	12"	MAPLE	TO REMAIN	127	12"	MAPLE	REMOVE
56	24"	MAPLE	TO REMAIN	128	10"	OAK	REMOVE
57	14"	MAPLE	TO REMAIN	129	12"	DECIDUOUS TREE	REMOVE
58	10"	SPRUCE	TO REMAIN	130	20"	DECIDUOUS TREE	REMOVE
59	16"	MAPLE	TO REMAIN	131	24"	DECIDUOUS TREE	REMOVE
60	16"	MAPLE	TO REMAIN	132	8"	DECIDUOUS TREE	REMOVE
61	16"	MAPLE	TO REMAIN	133	14"	DECIDUOUS TREE	REMOVE
62	8"	SPRUCE	TO REMAIN	134	14"	DECIDUOUS TREE	REMOVE
63	12"	MAPLE	TO REMAIN	135	14"	DECIDUOUS TREE	REMOVE
64	16"	MAPLE	TO REMAIN	136	8"	DECIDUOUS TREE	REMOVE
65	10"	MAPLE	TO REMAIN	137	12"	DECIDUOUS TREE	REMOVE
66	18"	MAPLE	TO REMAIN	138	14"	DECIDUOUS TREE	REMOVE
67	16"	MAPLE	TO REMAIN	139	36"	DECIDUOUS TREE	TO REMAIN
68	22"	MAPLE	TO REMAIN	140	16"	DECIDUOUS TREE	TO REMAIN
69	30"	DECIDUOUS TREE	REMOVE	141	12"	DECIDUOUS TREE	TO REMAIN
70	26"	DECIDUOUS TREE	REMOVE	142	14"	BEECH	TO REMAIN
71	8"	CHERRY	REMOVE	143	12"	DECIDUOUS TREE	TO REMAIN
72	8"	DECIDUOUS TREE	REMOVE	144	18"	DECIDUOUS TREE	REMOVE
				145	18"	DECIDUOUS TREE	REMOVE

52 TREES TO BE REMOVED

93 TREES TO REMAIN

EXISTING TREES TO BE REMOVED

0 15' 30' 60'
GRAPHIC SCALE 1"=30'

NORTH

REGISTERED LANDSCAPE ARCHITECT
BRUCE FEDERICO BERGER
NO. 001954
STATE OF NEW YORK

REVISIONS
REVISION 03-19-07
REVISION 05-29-07
REVISION 06-01-07
REVISION 11-04-07
REVISION 11-24-09
REVISION 02-22-10
REVISION 08-06-10

Armstrong Berger
Landscape Architecture • Planning • Construction Management
2611 State Street, Dallas, Texas 75204
214-871-0893 Phone, 214-871-0894 Fax, armberg@armberg.com
P.O. Box 191425, Dallas, Texas 75219

JEWISH CONGREGATION OF BROOKVILLE

East Norwich-Jericho Road (Route 106)
Muttontown, Nassau County, NY

DRAWING TITLE

EXISTING TREE REMOVAL PLAN

ISSUE DATE:	06 August 2010
DRAWING SCALE:	1"=30'
PROJECT NUMBER	02029
DRAWN BY:	BKM
REVIEWED BY:	
APPROVED BY:	BFB

DRAWING NUMBER

L3.00

PLANT LIST

QNTY.	SCIENTIFIC NAME	COMMON NAME	CONDITION
TREES			
09	Quercus rubra	Northern Red Oak	Single trunk, 10'-12' ht., well branched
11	Platanus acerifolia	London Planetree	Single trunk, 10'-12' ht., well branched
10	X Cupressocyparis leylandii	Leyland Cypress	6'-8' HT. well branched, full to base
10	X Cupressocyparis leylandii	Leyland Cypress	8-10' HT. well branched, full to base
11	X Cupressocyparis leylandii	Leyland Cypress	10'-12' HT. well branched, full to base
101	Pinus strobus	Eastern White Pine	6'-8' ht., 8'-10' wide
63	Ilex 'Nellie R. Stevens'	Nellie R. Stevens	5'-6' ht., full to base
03	Acer palmatum	Green Japanese Maple	5'-6' ht., specimen
39	Rhododendron maximum	Rhododendron Maximum	4'-5' ht.
136	Prunus laurocerasus Schipkaensis	Skip Laurel	4'-5' ht.

GENERAL LANDSCAPE NOTES

- All areas of landscape will be covered with an automatic irrigation/sprinkler system.
- Examine areas and conditions under which work is to be performed, notify Landscape Architect of any conditions detrimental to proper and timely completion of work.
- Upon planting, remove all wire, plastic, and nylon rope from upper 1/3 of rootball and trunk area and cut and remove burlap from top of root ball.
- Handle all plant material in accordance with best horticultural practices so that roots and root balls are adequately protected from mechanical injury, sun drying, winds and/or any other detrimental effects. Do not bind plants with nylon rope or wire in a manner that would damage bark, break branches, or destroy their natural shape.
- Guarantee all planting for one (1) year after final acceptance of work. Owner shall be responsible for proper maintenance of plants after final acceptance of work. Replace dead dead or diseased plant material not within vigorous, thriving conditions within fifteen (15) days of notification. Replace plants which have partially died, thereby damaging the shape, size, or symmetry of the aforementioned plant. Replace plants with same variety and size as originally planted at no cost to owner. Provide one (1) year guarantee on first replacement plant only.
- Provide a 1" layer of shredded hardwood mulch over all planting areas. Mulch selection to be approved by Landscape Architect.
- Insure that proper drainage exists in all tree pits. Fill pit half full of water prior to planting. If after an 8 hour time period, no appreciable amount of water has drained out, pump water out and provide sump pit drainage. Drill 6"-8" diameter hole in low side of bottom of pit, break through hardpan, fill hole with pea gravel and a 4" sump pipe (PVC). Place fabric over hole to prevent soil infiltration. Refer to details this sheet. The Landscape Architect shall be notified of any drainage problems as discovered.
- Confirm operation and coverage of new Irrigation/Sprinkler system in all bed areas. Adjust as required to provide ample average coverage of entire beds.
- Remove all debris generated by work operations. Leave entire planting areas in a raked condition free of debris and paved areas adjoining planting areas in a broom clean condition on a daily basis.

NOTE

LEYLAND CYPRESS ARE TO BE PLACED BY LANDSCAPE ARCHITECT

© 2010, ARMSTRONG • BERGER
LANDSCAPE ARCHITECTS • PLANNERS
CONSTRUCTION MANAGEMENT
These drawings and/or specifications provided within this document set are prepared specifically for this noted project. These documents are not to be used in whole or in part for any other purposes or by any other parties other than those under contract or with specific written permissions from Armstrong-Berger. Reproduction is prohibited.

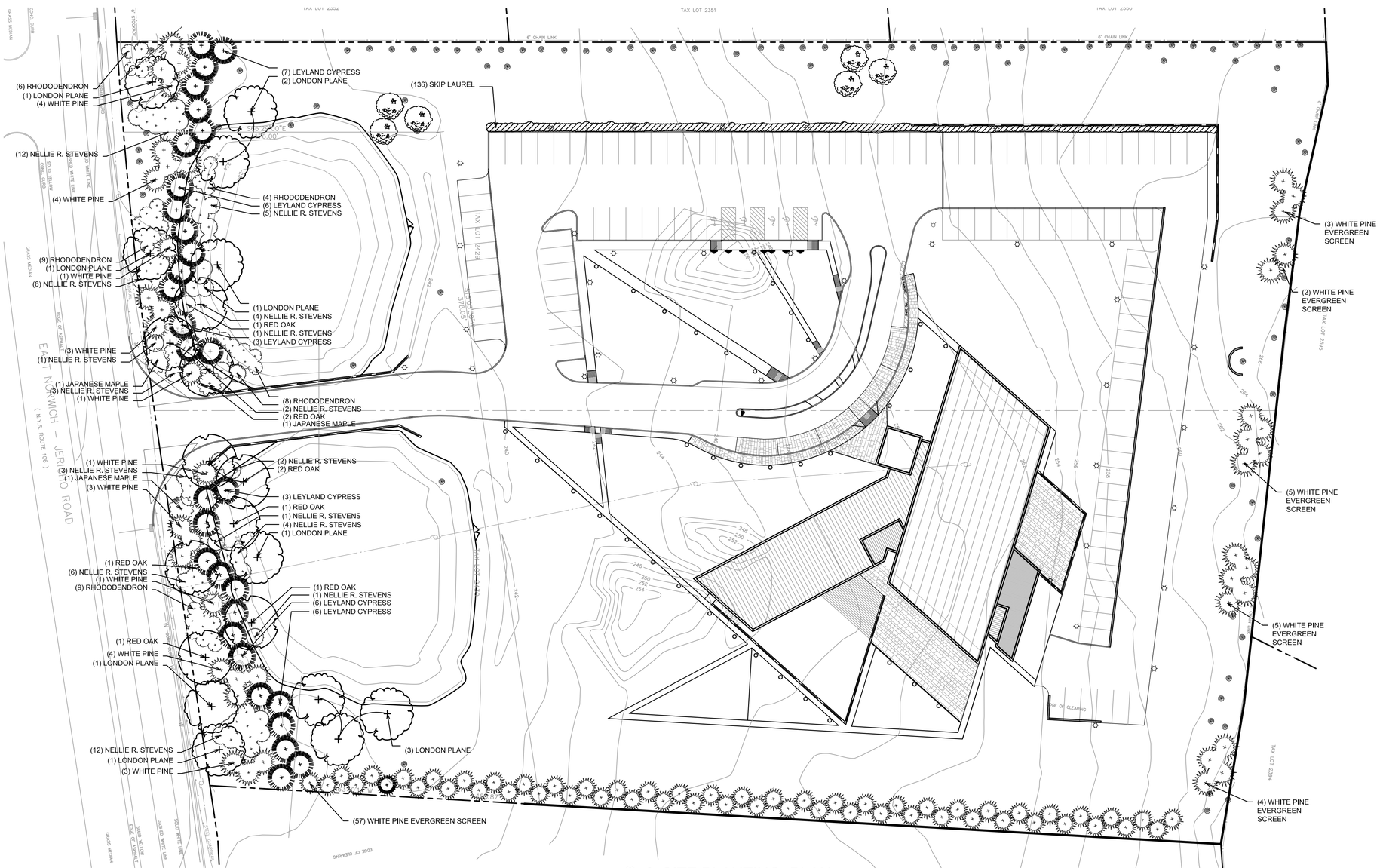

01 SITE PLANTING PLAN

SCALE : 1"=30'

0 15' 30' 60'
GRAPHIC SCALE 1"=30'

NORTH

REGISTERED LANDSCAPE ARCHITECT
BRUCE FREDERICK BERGER
NO. 001954
STATE OF NEW YORK

REVISIONS

REVISION 03-19-07
REVISION 05-29-07
REVISION 06-01-07
REVISION 11-04-07
REVISION 11-24-09
REVISION 02-22-10
REVISION 08-06-10

Armstrong Berger
Landscape Architecture • Planning • Construction Management
2611 State Street
Dallas, Texas 75204
214-871-0893 Phone
214-871-0894 Fax
amberg @ amberg.com
P.O. Box 191425
Dallas, Texas 75219

JEWISH CONGREGATION OF BROOKVILLE

East Norwich-Jericho Road (Route 106)
Muttontown, Nassau County, NY

DRAWING TITLE

SITE PLANTING PLAN

ISSUE DATE:	06 August 2010
DRAWING SCALE:	1"=30'
PROJECT NUMBER	02029
DRAWN BY:	BKM
REVIEWED BY:	BKM
APPROVED BY:	BFB

DRAWING NUMBER

L1.00